OGDEN SCHOOL DISTRICT
HIGHLAND JUNIOR HIGH SCHOOL REMODEL

325 GRAMERCY AVE.
OGDEN, UTAH 84404
VOLUME NUMBER
CONSTRUCTION DOCUMENTS
APRIL 15, 2015

MHTN ARCHITECTS
MHTN Architects, Inc.
420 East South Temple
Suite 100
Salt Lake City, Utah 84111
Telephone (801) 595-6700
Telefax (801) 595-6717
www.mhtn.com

ABBREVIATIONS

AC	AIR CONDITIONING
AFF	ABOVE FINISH FLOOR
ALT	ALTERNATE
ALUM	ALUMINUM
APPROX	APPROXIMATE
ARCH	ARCHITECTURAL
BD	BOARD
BLDG	BUILDING
BLKG	BLOCKING
BO	BOTTOM OF
BOT	BOTTOM
BRG	BEARING
BYD	BEYOND
CB	CATCH BASIN
CIP	CAST-IN-PLACE
CJ	CONTROL JOINT
CL	CENTER LINE
CLG	CEILING
CMU	CONCRETE MASONRY UNIT
CO	CLEANOUT
COL	COLUMN
COMM	COMMUNICATION
CONC	CONCRETE
CONF	CONFERENCE
CONST	CONSTRUCTION
CONT	CONTINUOUS
CONTR	CONTRACTOR
COORD	COORDINATE
CORR	CORRIDOR
CSK	COUNTER SUNK
CTR	CENTER
DEMO	DEMOLITION
DIA	DIAMETER
DIAG	DIAGONAL
DIM	DIMENSION
DN	DOWN
DR	DOOR
DS	DOWNSPOUT
DTL	DETAIL
DWG	DRAWING
EIFS	EXTERIOR INSULATION AND FINISH SYSTEM
EL	ELEVATION
ELEC	ELECTRICAL
ELEV	ELEVATOR
EQ	EQUAL
EQUIP	EQUIPMENT
EWC	ELECTRICAL WATER COOLER
EXP	EXPANSION
FD	FLOOR DRAIN
FEC	FIRE EXTINGUISHER CABINET
FIN	FINISH
FIN FLR	FINISH FLOOR
FLR	FLOOR
FT	FEET
GA	GAUGE/GAGE
GI	GALVANIZED IRON
GLU-LAM	GLUE LAMINATED
GYP BD	GYPSUM BOARD
HC	HANDICAPPED
HVAC	HEATING, VENTILATION, AIR CONDITIONING
ID	INSIDE DIAMETER
INT	INTERIOR
ISO	ISOMETRIC
JAN	JANITOR
JST	JOIST
JT	JOINT
KD	KNOCK DOWN
KOP	KNOCKOUT PANEL
LAB	LABORATORY
LAV	LAVATORY
MAINT	MAINTENANCE
MAX	MAXIMUM
MECH	MECHANICAL
MEZZ	MEZZANINE
MFR	MANUFACTURER
MH	MANHOLE
MIN	MINIMUM
MISC	MISCELLANEOUS
MO	MASONRY OPENING
NIC	NOT IN CONTRACT
NO	NUMBER
NOM	NOMINAL
NTS	NOT TO SCALE
OA	OVERALL
OC	ON CENTER
OD	OUTSIDE DIAMETER
OH	OVER HEAD
OH DR	OVERHEAD DOOR
OPP	OPPOSITE
PERP	PERPENDICULAR
PL	PLATE
PL	PROPERTY LINE
PL GL	PLATE GLASS
PLAM	PLASTIC LAMINATE
PLBG	PLUMBING
PLYWD	PLYWOOD
PR	PAIR
PREFAB	PREFABRICATED
QTY	QUANTITY
RD	ROOF DRAIN
REINF	REINFORCED / REINFORCING
REQD	REQUIRE / REQUIRED
RFG	REFRIGERATOR
RM	ROOM
RO	ROUGH OPENING
RTD	RATED
RTU	ROOF TOP UNIT
RV	ROOF VENT
SCHED	SCHEDULE
SIM	SIMILAR
SPEC	SPECIFICATION
SQ	SQUARE
STD	STANDARD
STL	STEEL
STRUC	STRUCTURAL
SUSP CLG	SUSPENDED CEILING
THK	THICKNESS
TO	TOP OF
TOB	TOP OF BEAM
TOS	TOP OF SLAB, TOP OF STRUCTURE
TOW	TOP OF WALL
TYP	TYPICAL
UNO	UNLESS NOTED OTHERWISE
VCT	VINYL COMPOSITION TILE
VERT	VERTICAL
VEST	VESTIBULE
VTR	VENT THROUGH ROOF
W/	WITH
W/O	WITHOUT
WC	WATER CLOSET
WD	WOOD
WF	WIDE FLANGE
WH	WATER HEATER
WWF	WELDED WIRE FABRIC
XFMR	TRANSFORMER

GENERAL SYMBOLS

SEE PLUMBING, MECHANICAL AND ELECTRICAL FOR DISCIPLINE SYMBOLS

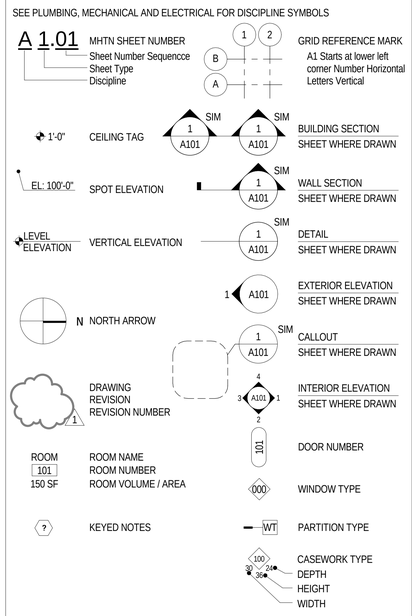

MATERIALS

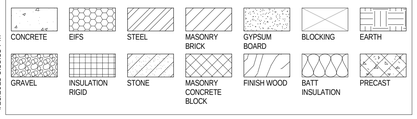

PROJECT DATA

CIVIL RIGHTS	:	YEAR
AMERICAN DISABILITY ACT (ADA) STANDARD FOR ACCESSIBLE DESIGN	:	2010

APPLICABLE CODES	:	YEAR
INTERNATIONAL BUILDING CODE (IBC)	:	2012
INTERNATIONAL MECHANICAL CODE (IMC)	:	2012
INTERNATIONAL PLUMBING CODE (IPC)	:	2012
INTERNATIONAL ENERGY CONSERVATION CODE (IECC)	:	2012
NATIONAL ELECTRIC CODE (NEC)	:	2011

OCCUPANCY CLASSIFICATION	:	E
CONSTRUCTION TYPE	:	II B
FULLY SPRINKLED	:	YES

FIRE-RESISTIVE REQUIREMENTS:	TYPE: IIB
STRUCTURAL FRAME	0
BEARING WALLS EXTERIOR	0
BEARING WALLS INTERIOR	0
NONBEARING WALLS EXTERIOR	0
NONBEARING WALLS INTERIOR	0
FLOOR - CEILING CONSTRUCTION	0
ROOF - CEILING CONSTRUCTION	0
SHAFTS	N/A

VICINITY MAP

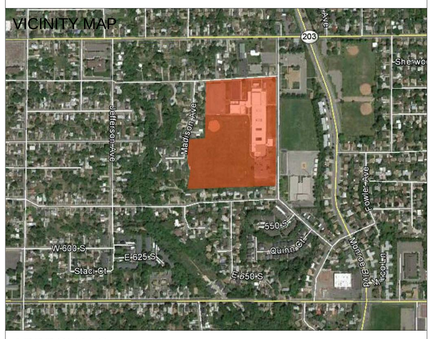

APPROVALS

APPROVERS NAME, TITLE	DATE:
APPROVERS NAME, TITLE	DATE:
APPROVERS NAME, TITLE	DATE:

INDEX TO DRAWINGS - CONSTRUCTION DOCUMENTS

GENERAL
G0.01 COVER SHEET
G0.02 WALL TYPES

CIVIL
CD101 PARKING LOT DEMOLITION PLAN
CD102 CAFETERIA DEMOLITION PLAN
CS101 PARKING LOT SITE PLAN
CS102 CAFETERIA SITE PLAN
CG101 PARKING LOT GRADING & DRAINAGE PLAN
CG102 CAFETERIA GRADING & DRAINAGE PLAN
CU101 PARKING LOT UTILITY PLAN
CU102 CAFETERIA UTILITY PLAN
CD501 CONSTRUCTION DETAILS

LANDSCAPE
LI101 IRRIGATION PLAN
LI102 IRRIGATION PLAN
LI501 IRRIGATION DETAILS
LP1.01 PLANTING PLAN
LP102 PLANTING PLAN

STRUCTURAL
S001 STRUCTURAL NOTES
S002 SCHEDULES
S003 SCHEDULES
S101 CANOPY PLANS
S201 DETAILS

ARCHITECTURAL
AD1.01 MAIN LEVEL DEMOLITION PLAN
AD1.02 PARTIAL DEMO PLANS
A1.10 MAIN LEVEL OVERALL PLAN
A1.11 MAIN LEVEL PARTIAL PLANS
A1.12 REFLECTED CEILING PLANS
A3.01 CANOPIES
A4.01 CASEWORK / FINISH SCHEDULE
A4.02 INTERIOR ELEVATIONS
A4.03 FLOOR PATTERN PLAN - AREA 'A'
A4.04 FLOOR PATTERN PLAN - AREA 'B'
A4.05 FLOOR PATTERN PLAN - AREA 'C'
A4.06 FLOOR PATTERN PLAN - AREA 'D'
A4.07 ADA MOUNTING STANDARDS
A5.01 DETAILS
A6.01 DOOR SCHEDULE AND WINDOW TYPES

MECHANICAL
MD1.02 MECHANICAL DEMO PLANS
M1.02 MECHANICAL PLANS
M5.01 MECHANICAL SCHED. & DETAILS

PLUMBING
PD1.02 PLUMBING DEMO PLANS
P1.02 PLUMBING PLANS
P4.01 ENLARGED PLUMBING PLANS
P4.02 ENLARGED PLUMBING PLANS
P5.01 PLUMBING SCHED. & DETAILS

ELECTRICAL
E0.01 SYMBOLS, SCHEDULES AND NOTES
E1.00 ELECTRICAL SITE PLAN
E1.01 FIRST FLOOR OVERALL ELECTRICAL PLAN
E3.01 FIRST FLOOR ELECTRICAL PLANS
E4.01 ELECTRICAL DIAGRAMS

CONSULTANTS

ARCHITECTURE
MHTN ARCHITECTS, INC.
420 EAST SOUTH, SUITE 100
SALT LAKE CITY, UTAH 84111
Phone: (801) 595-6700
Fax: (801) 395-6717

CIVIL
GREAT BASIN ENGINEERING
5746 SOUTH 1475 EAST,
SUITE 100
OGDEN, UTAH 84403
Phone: (801) 521-0222
Fax: (801) 392-7544

LANDSCAPE
MHTN ARCHITECTS, INC.
420 EAST SOUTH, SUITE 100
SALT LAKE CITY, UTAH 84111
Phone: (801) 595-6700
Fax: (801) 395-6717

STRUCTURAL
ARW ENGINEERS
1594 WEST PARK CIRLCE,
SUITE 100
OGDEN, UTAH
Phone: (801) 782 6008
Fax: (801) 782-4656

MECHANICAL
OLSEN & PETERSON
CONSULTING ENGINEERS
14 EAST 2700 SOUTH
SALT LAKE CITY, UTAH 84105
Phone: (801) 486-4646
Fax: (801) 467-2531

ELECTRICAL
BNA CONSULTING
635 SOUTH STATE STREET
SALT LAKE CITY, UTAH 84111
Phone: (801) 532-2196
Fax: (801) 532-2305

OGDEN SCHOOL DISTRICT
HIGHLAND JUNIOR HIGH SCHOOL
REMODEL
325 GRAMERCY AVE.
OGDEN, UTAH 84404

©2011 MHTN ARCHITECTS, INC.
Drawings, written material, and design concepts shall not be used or reproduced in whole or part in any form or format without prior written consent of MHTN Architects, Inc. Do not scale drawings. Use given dimensions only. If not shown, verify correct dimensions with the Architect. Contractor shall check and verify all dimensions and conditions at job site.

SEAL

STATE OF UTAH
BRIAN DAVID PARKER
6204273-0301
S-NR-3495
LICENSED ARCHITECT

MHTN PROJECT NO. 2015505

DRAWN BY: BH CHECKED BY: RF, MP

ISSUED:

NO.	DATE	DESCRIPTION

REVISIONS: CONTRACTOR TO VERIFY DRAWINGS IN FIELD USE REFLECT LAST REVISION DATE.

NO.	DATE	DESCRIPTION

SHEET NAME
COVER SHEET

CONSTRUCTION DOCUMENTS
APRIL 15, 2015

SHEET NUMBER
G0.01

C:\Users\BenH\Documents\AA15_2015505_OSD Highland JHS remodel_Central_BenH.rvt
4/13/2015 5:38:53 PM

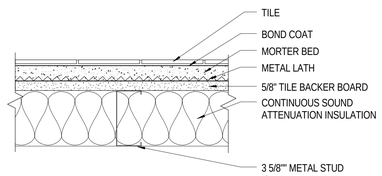

W4 WALL TYPE 4

SCALE: 3" = 1'-0"

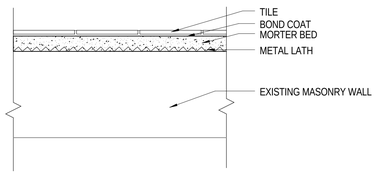

W3 WALL TYPE 3

SCALE: 3" = 1'-0"

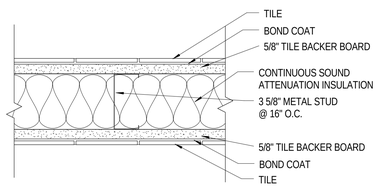

W2 WALL TYPE 2

SCALE: 3" = 1'-0"

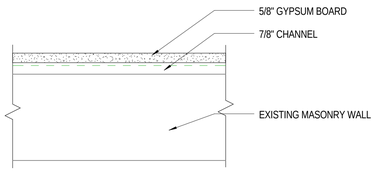

W1 WALL TYPE 1

SCALE: 3" = 1'-0"

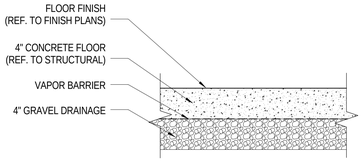

F1 FLOOR TYPE 1

SCALE: 1 1/2" = 1'-0"

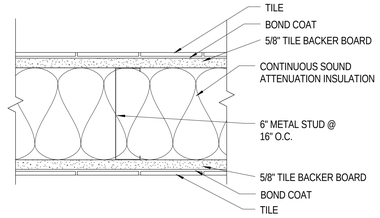

W6 WALL TYPE 6

SCALE: 3" = 1'-0"

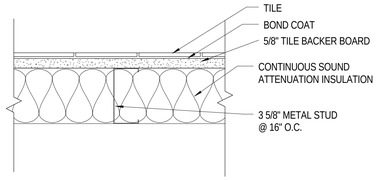

W5 WALL TYPE 5

SCALE: 3" = 1'-0"

C:\Users\BenH\Documents\A15_2015505_OSD Highland JrHS remodel_Central_BenH.rvt
4/13/2015 5:40:21 PM

MHTN
ARCHITECTS
MHTN Architects, Inc.
420 East South Temple
Suite 100
Salt Lake City, Utah 84111
Telephone (801) 595-6700
Telefax (801) 595-6717
www.mhtn.com

OGDEN
SCHOOL DISTRICT
Empowering Excellence Through Education

OGDEN SCHOOL DISTRICT
HIGHLAND JUNIOR HIGH SCHOOL REMODEL
325 GRAMERCY AVE.
OGDEN, UTAH 84404

©2011 MHTN ARCHITECTS, INC.
Drawings, written material, and design concepts shall not be used or reproduced in whole or part in any form or format without prior written consent of MHTN Architects, Inc. Do not scale drawings. Use given dimensions only. If not shown, verify correct dimensions with the Architect. Contractor shall check and verify all dimensions and conditions at job site.

SEAL

STATE OF UTAH
BRIAN DAVID PARKER
6294273-0301
15 MAR 2015
LICENSED ARCHITECT

MHTN PROJECT NO. 2015505

DRAWN BY: BH CHECKED BY: RF & MP

ISSUED:

NO.	DATE	DESCRIPTION

CONTRACTOR TO VERIFY DRAWINGS IN FIELD USE REFLECT LAST REVISION DATE.

NO.	DATE	DESCRIPTION

SHEET NAME
WALL TYPES

CONSTRUCTION
DOCUMENTS
APRIL 15, 2015

SHEET NUMBER
G0.02

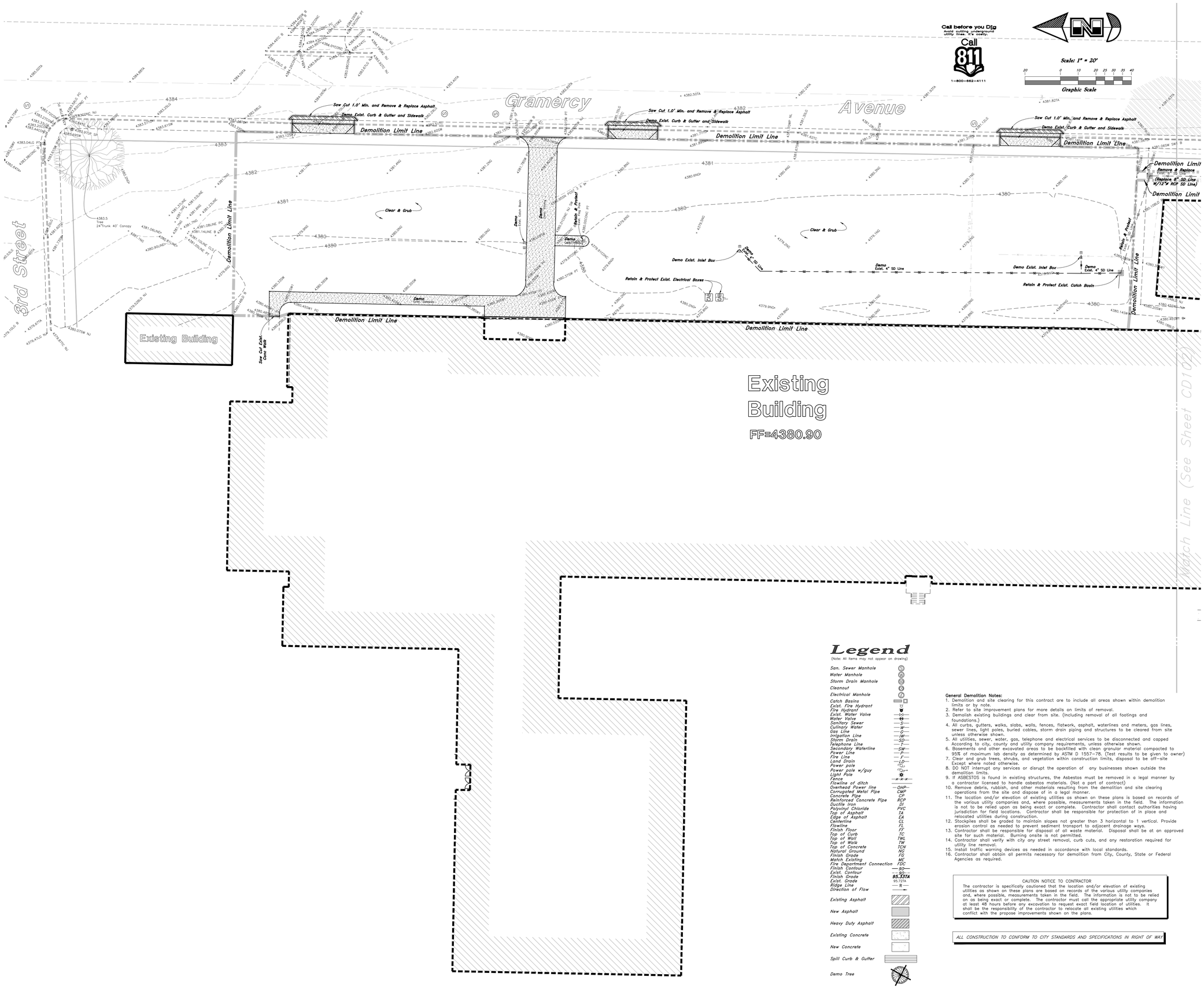

Legend

(Note: All items may not appear on drawing)

San. Sewer Manhole	S
Water Manhole	W
Storm Drain Manhole	D
Cleanout	C
Electrical Manhole	E
Catch Basins	
Exist. Fire Hydrant	
Fire Hydrant	
Exist. Water Valve	WV
Water Valve	WV
Sanitary Sewer	S
Culinary Water	W
Gas Line	G
Irrigation Line	IW
Storm Drain	SD
Telephone Line	T
Secondary Waterline	SW
Power Line	P
Fire Line	F
Land Drain	LD
Power pole	
Power pole w/guy	
Light Pole	
Fence	
Flowline of ditch	
Overhead Power line	OHP
Corrugated Metal Pipe	CMP
Concrete Pipe	CP
Reinforced Concrete Pipe	RCP
Ductile Iron	DI
Polyvinyl Chloride	PVC
Top of Asphalt	TA
Edge of Asphalt	EA
Centerline	CL
Flowline	FL
Finish Floor	FF
Top of Curb	TC
Top of Wall	TWL
Top of Walk	TW
Top of Concrete	TCN
Natural Ground	NG
Finish Grade	FG
Match Existing	ME
Fire Department Connection	FDC
Finish Contour	90
Exist. Contour	90
Finish Grade	95.337A
Exist. Grade	95.721A
Ridge Line	R
Direction of Flow	
Existing Asphalt	
New Asphalt	
Heavy Duty Asphalt	
Existing Concrete	
New Concrete	
Spill Curb & Gutter	
Demo Tree	

General Demolition Notes:

1. Demolition and site clearing for this contract are to include all areas shown within demolition limits or by note.
2. Refer to site improvement plans for more details on limits of removal.
3. Demolish existing buildings and clear from site. (Including removal of all footings and foundations.)
4. All curbs, gutters, walks, slabs, walls, fences, flatwork, asphalt, waterlines and meters, gas lines, sewer lines, light poles, buried cables, storm drain piping and structures to be cleared from site unless otherwise shown.
5. All utilities, sewer, water, gas, telephone and electrical services to be disconnected and capped According to city, county and utility company requirements, unless otherwise shown.
6. Basements and other excavated areas to be backfilled with clean granular material compacted to 95% of maximum lab density as determined by ASTM D 1557-78. (Test results to be given to owner)
7. Clear and grub trees, shrubs, and vegetation within construction limits, disposal to be off-site Except where noted otherwise.
8. DO NOT interrupt any services or disrupt the operation of any businesses shown outside the demolition limits.
9. If ASBESTOS is found in existing structures, the Asbestos must be removed in a legal manner by a contractor licensed to handle asbestos materials. (Not a part of contract)
10. Remove debris, rubbish, and other materials resulting from the demolition and site clearing operations from the site and dispose of in a legal manner.
11. The location and/or elevation of existing utilities as shown on these plans is based on records of the various utility companies and, where possible, measurements taken in the field. The information is not to be relied upon as being exact or complete. Contractor shall contact authorities having jurisdiction for field locations. Contractor shall be responsible for protection of in place and relocated utilities during construction.
12. Stockpiles shall be graded to maintain slopes not greater than 3 horizontal to 1 vertical. Provide erosion control as needed to prevent sediment transport to adjacent drainage ways.
13. Contractor shall be responsible for disposal of all waste material. Disposal shall be at an approved site for such material. Burning onsite is not permitted.
14. Contractor shall verify with city any street removal, curb cuts, and any restoration required for utility line removal.
15. Install traffic warning devices as needed in accordance with local standards.
16. Contractor shall obtain all permits necessary for demolition from City, County, State or Federal Agencies as required.

CAUTION NOTICE TO CONTRACTOR

The contractor is specifically cautioned that the location and/or elevation of existing utilities as shown on these plans are based on records of the various utility companies and, where possible, measurements taken in the field. The information is not to be relied on as being exact or complete. The contractor must call the appropriate utility company at least 48 hours before any excavation to request exact field location of utilities. It shall be the responsibility of the contractor to relocate all existing utilities which conflict with the propose improvements shown on the plans.

ALL CONSTRUCTION TO CONFORM TO CITY STANDARDS AND SPECIFICATIONS IN RIGHT OF WAY

MHTN ARCHITECTS

MHTN Architects, Inc.
420 East South Temple
Suite 100
Salt Lake City, Utah 84111
Telephone (801) 595-6700
Telefax (801) 595-6717
www.mhtn.com

OGDEN SCHOOL DISTRICT
Empowering Excellence Through Education

OGDEN SCHOOL DISTRICT

HIGHLAND JUNIOR HIGH SCHOOL REMODEL

325 GRAMERCY AVE.
OGDEN, UTAH 84404

©2011 MHTN ARCHITECTS, INC.

Drawings, written material, and design concepts shall not be used or reproduced in whole or part in any form or format without prior written consent of MHTN Architects, Inc. Do not scale drawings. Use given dimensions only. If not shown, verify correct dimensions with the Architect. Contractor shall check and verify all dimensions and conditions at job site.

SEAL

No. 166484 MARK EUGENE RABBITT 4-15-15 STATE OF UTAH

MHTN PROJECT NO. 2015505

DRAWN BY: Author CHECKED BY: Checker

ISSUED:

NO.	DATE	DESCRIPTION

CONTRACTOR TO VERIFY DRAWINGS IN FIELD USE REFLECT LAST REVISION DATE.

NO.	DATE	DESCRIPTION

SHEET NAME

PARKING LOT DEMOLITION PLAN

CONSTRUCTION DOCUMENTS
APRIL 15, 2015

SHEET NUMBER

CD101

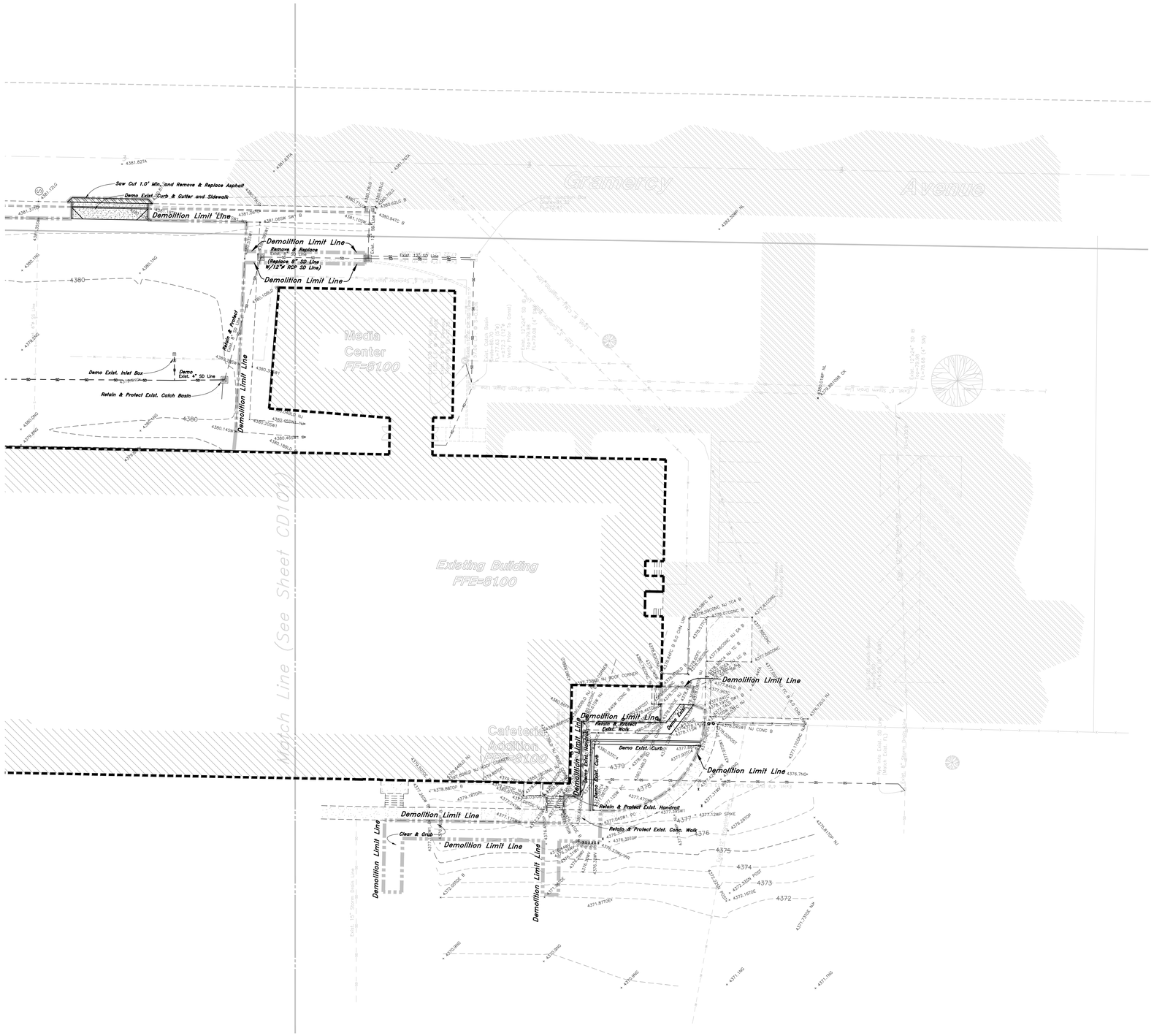

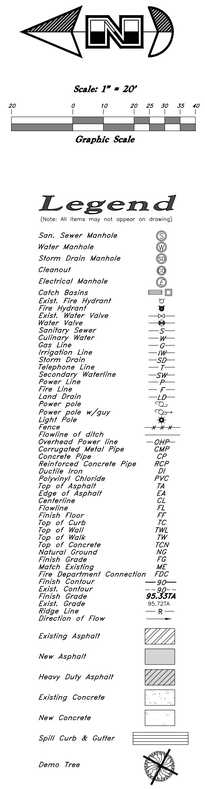

Call before you Dig
Avoid cutting underground utility lines in a reality.
Call 811
1-800-662-4111

General Demolition Notes:

1. Demolition and site clearing for this contract are to include all areas shown within demolition limits or by note.
2. Refer to site improvement plans for more details on limits of removal.
3. Demolish existing buildings and clear from site. (including removal of all footings and foundations.)
4. All curbs, gutters, walks, slabs, walls, fences, flatwork, asphalt, waterlines and meters, gas lines, sewer lines, light poles, buried cables, storm drain piping and structures to be cleared from site unless otherwise shown.
5. All utilities, sewer, water, gas, telephone and electrical services to be disconnected and capped According to city, county and utility company requirements, unless otherwise shown.
6. Basements and other excavated areas to be backfilled with clean granular material compacted to 95% of maximum lab density as determined by ASTM D 1557-78. (Test results to be given to owner)
7. Clear and grub trees, shrubs, and vegetation within construction limits, disposal to be off-site Except where noted otherwise.
8. DO NOT interrupt any services or disrupt the operation of any businesses shown outside the demolition limits.
9. If ASBESTOS is found in existing structures, the Asbestos must be removed in a legal manner by a contractor licensed to handle asbestos materials. (Not a part of contract)
10. Remove debris, rubbish, and other materials resulting from the demolition and site clearing operations from the site and dispose of in a legal manner.
11. The location and/or elevation of existing utilities as shown on these plans is based on records of the various utility companies and, where possible, measurements taken in the field. The information is not to be relied upon as being exact or complete. Contractor shall contact authorities having jurisdiction for field locations. Contractor shall be responsible for protection of in place and relocated utilities during construction.
12. Stockpiles shall be graded to maintain slopes not greater than 3 horizontal to 1 vertical. Provide erosion control as needed to prevent sediment transport to adjacent drainage ways.
13. Contractor shall be responsible for disposal of all waste material. Disposal shall be at an approved site for such material. Burning onsite is not permitted.
14. Contractor shall verify with city any street removal, curb cuts, and any restoration required for utility line removal.
15. Install traffic warning devices as needed in accordance with local standards.
16. Contractor shall obtain all permits necessary for demolition from City, County, State or Federal Agencies as required.

CAUTION NOTICE TO CONTRACTOR

The contractor is specifically cautioned that the location and/or elevation of existing utilities as shown on these plans are based on records of the various utility companies and, where possible, measurements taken in the field. The information is not to be relied on as being exact or complete. The contractor must call the appropriate utility company at least 48 hours before any excavation to request exact field location of utilities. It shall be the responsibility of the contractor to relocate all existing utilities which conflict with the propose improvements shown on the plans.

ALL CONSTRUCTION TO CONFORM TO CITY STANDARDS AND SPECIFICATIONS IN RIGHT OF WAY

MHTN ARCHITECTS
MHTN Architects, Inc.
420 East South Temple
Suite 100
Salt Lake City, Utah 84111
Telephone (801) 595-6700
Telefax (801) 595-6717
www.mhtn.com

OGDEN SCHOOL DISTRICT
Empowering Excellence Through Education

OGDEN SCHOOL DISTRICT
HIGHLAND JUNIOR HIGH SCHOOL REMODEL
325 GRAMERCY AVE.
OGDEN, UTAH 84404

©2011 MHTN ARCHITECTS, INC.
Drawings, written material, and design concepts shall not be used or reproduced in whole or part in any form or format without prior written consent of MHTN Architects, Inc. Do not scale drawings. Use given dimensions only. If not shown, verify correct dimensions with the Architect. Contractor shall check and verify all dimensions and conditions at job site.

SEAL

MHTN PROJECT NO. 2015505

DRAWN BY: Author CHECKED BY: Checker

ISSUED:

NO.	DATE	DESCRIPTION

CONTRACTOR TO VERIFY DRAWINGS IN FIELD USE REFLECT LAST REVISION DATE.

NO.	DATE	DESCRIPTION

SHEET NAME
CAFETERIA DEMOLITION PLAN

CONSTRUCTION DOCUMENTS
APRIL 15, 2015

SHEET NUMBER
CD102

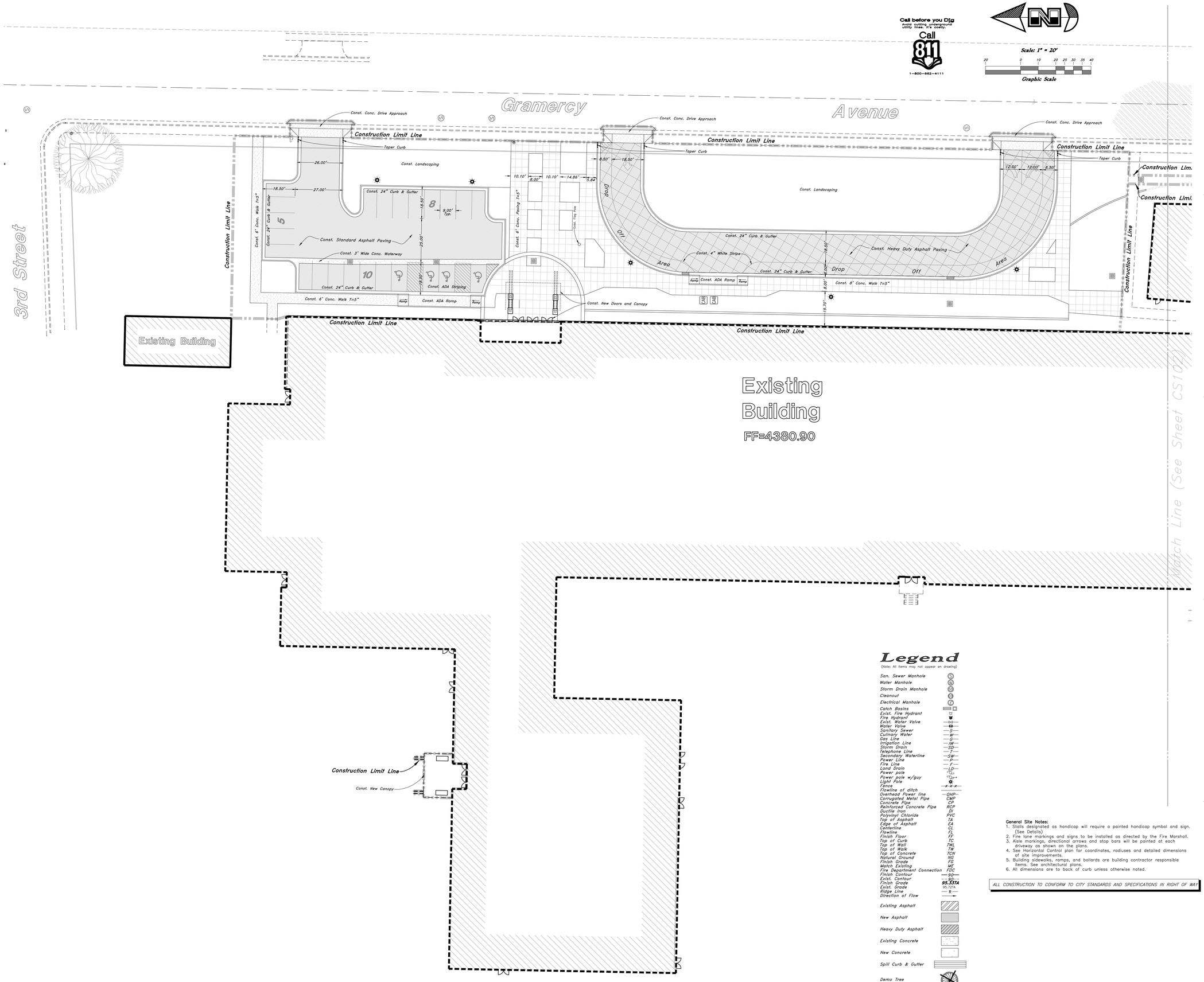

Legend

(Note: All items may not appear on drawing)

San. Sewer Manhole	S
Water Manhole	W
Storm Drain Manhole	S
Cleanout	C
Electrical Manhole	E
Catch Basins	
Exist. Fire Hydrant	
Fire Hydrant	
Exist. Water Valve	WV
Water Valve	WV
Sanitary Sewer	—S—
Culinary Water	—W—
Gas Line	—G—
Irrigation Line	—IW—
Storm Drain	—SD—
Telephone Line	—T—
Secondary Waterline	—SW—
Power Line	—P—
Fire Line	—F—
Land Drain	—LD—
Power pole	
Power pole w/guy	
Light Pole	
Fence	x x x
Flowline of ditch	
Overhead Power line	—OHP—
Corrugated Metal Pipe	CMP
Concrete Pipe	CP
Reinforced Concrete Pipe	RCP
Ductile Iron	DI
Polyvinyl Chloride	PVC
Top of Asphalt	TA
Edge of Asphalt	EA
Centerline	CL
Flowline	FL
Finish Floor	FF
Top of Curb	TC
Top of Wall	TWL
Top of Walk	TW
Top of Concrete	TCN
Natural Ground	NG
Finish Grade	FG
Match Existing	ME
Fire Department Connection	FDC
Finish Contour	—90—
Exist. Contour	—90—
Finish Grade	95.33TA
Exist. Grade	95.72TA
Ridge Line	—R—
Direction of Flow	
Existing Asphalt	
New Asphalt	
Heavy Duty Asphalt	
Existing Concrete	
New Concrete	
Spill Curb & Gutter	
Demo Tree	

General Site Notes:

1. Stalls designated as handicap will require a painted handicap symbol and sign. (See Details)
2. Fire lane markings and signs to be installed as directed by the Fire Marshall.
3. Aisle markings, directional arrows and stop bars will be painted at each driveway as shown on the plans.
4. See Horizontal Control plan for coordinates, radiuses and detailed dimensions of site improvements.
5. Building sidewalks, ramps, and bollards are building contractor responsible items. See architectural plans.
6. All dimensions are to back of curb unless otherwise noted.

ALL CONSTRUCTION TO CONFORM TO CITY STANDARDS AND SPECIFICATIONS IN RIGHT OF WAY

MHTN ARCHITECTS
MHTN Architects, Inc.
420 East South Temple
Suite 100
Salt Lake City, Utah 84111
Telephone (801) 595-6700
Telefax (801) 595-6717
www.mhtn.com

OGDEN SCHOOL DISTRICT
Empowering Excellence Through Education

OGDEN SCHOOL DISTRICT

HIGHLAND JUNIOR HIGH SCHOOL REMODEL

325 GRAMERCY AVE.
OGDEN, UTAH 84404

©2011 MHTN ARCHITECTS, INC.

Drawings, written material, and design concepts shall not be used or reproduced in whole or part in any form or format without prior written consent of MHTN Architects, Inc. Do not scale drawings. Use given dimensions only. If not shown, verify correct dimensions with the Architect. Contractor shall check and verify all dimensions and conditions at job site.

SEAL

LICENSED PROFESSIONAL ARCHITECT No. 166484 MARK EUGENE RABBITT 4-15-15 STATE OF UTAH

MHTN PROJECT NO. 2015505

DRAWN BY: Author CHECKED BY: Checker

ISSUED:

NO.	DATE	DESCRIPTION

CONTRACTOR TO VERIFY DRAWINGS IN FIELD USE REFLECT LAST REVISION DATE.

NO.	DATE	DESCRIPTION

SHEET NAME

PARKING LOT SITE PLAN

CONSTRUCTION DOCUMENTS
APRIL 15, 2015

SHEET NUMBER

CS101

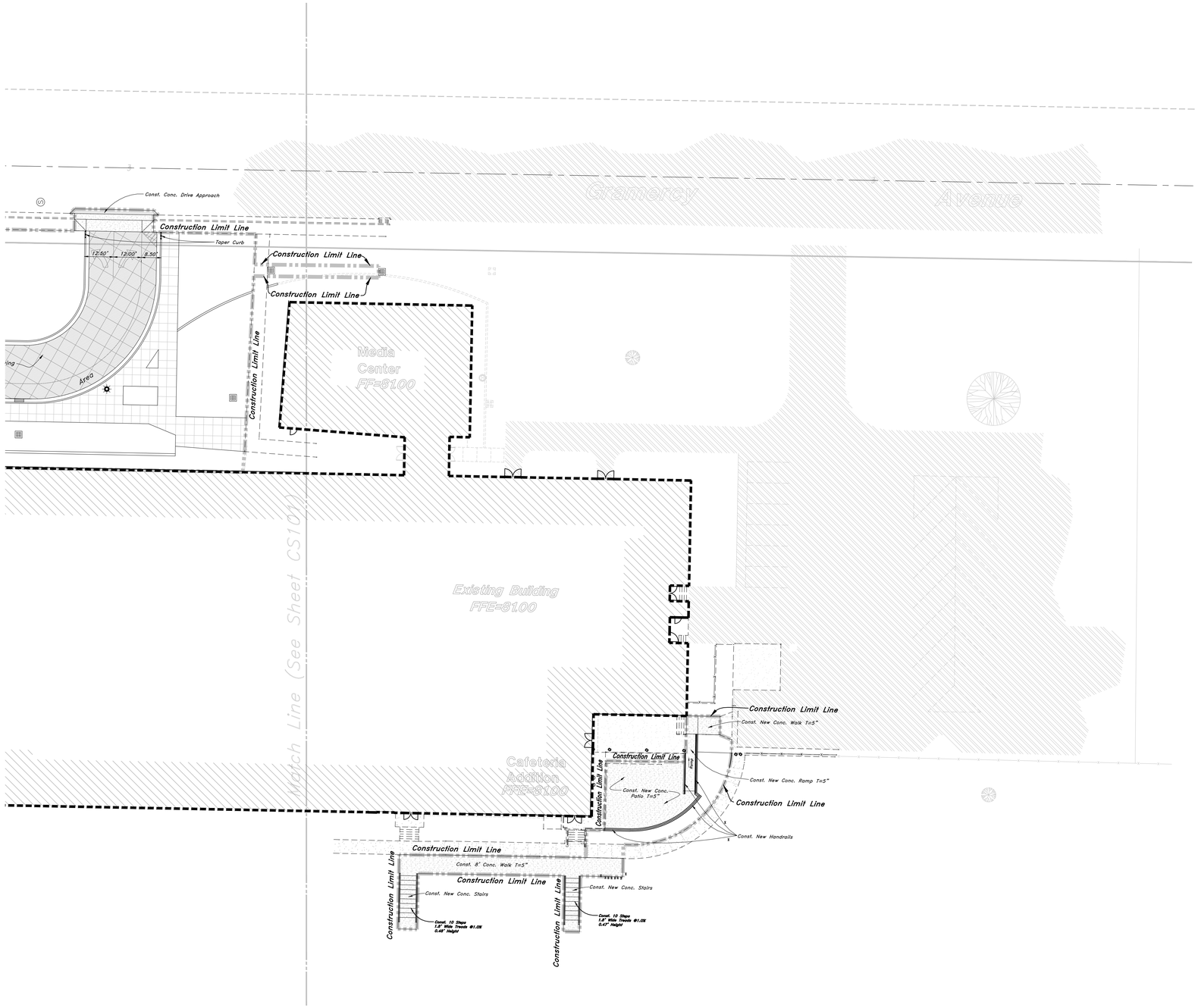

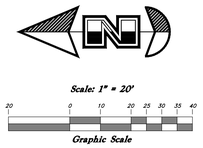

Legend

(Note: All items may not appear on drawing)

San. Sewer Manhole	S
Water Manhole	W
Storm Drain Manhole	D
Cleanout	S
Electrical Manhole	E
Catch Basins	
Exist. Fire Hydrant	
Fire Hydrant	
Exist. Water Valve	SV
Water Valve	WV
Sanitary Sewer	S
Culinary Water	W
Gas Line	G
Irrigation Line	IW
Storm Drain	SD
Telephone Line	T
Secondary Waterline	SW
Power Line	P
Fire Line	F
Land Drain	LD
Power pole	
Power pole w/guy	
Light Pole	
Fence	x x x
Flowline of ditch	
Overhead Power line	OHP
Corrugated Metal Pipe	CMP
Concrete Pipe	CP
Reinforced Concrete Pipe	RCP
Ductile Iron	DI
Polyvinyl Chloride	PVC
Top of Asphalt	TA
Edge of Asphalt	EA
Centerline	CL
Flowline	FL
Finish Floor	FF
Top of Curb	TC
Top of Wall	TWL
Top of Walk	TW
Top of Concrete	TCN
Natural Ground	NG
Finish Grade	FG
Match Existing	ME
Fire Department Connection	FDC
Finish Contour	90
Exist. Contour	90
Finish Grade	95.53TA
Exist. Grade	95.72TA
Ridge Line	R
Direction of Flow	
Existing Asphalt	
New Asphalt	
Heavy Duty Asphalt	
Existing Concrete	
New Concrete	
Spill Curb & Gutter	
Demo Tree	

Call before you Dig
Avoid cutting underground utility lines. It's costly.
Call 811
1-800-662-4111

General Site Notes:

1. Stalls designated as handicap will require a painted handicap symbol and sign. (See Details)
2. Fire lane markings and signs to be installed as directed by the Fire Marshall.
3. Aisle markings, directional arrows and stop bars will be painted at each driveway as shown on the plans.
4. See Horizontal Control plan for coordinates, radiuses and detailed dimensions of site improvements.
5. Building sidewalks, ramps, and bollards are building contractor responsible items. See architectural plans.
6. All dimensions are to back of curb unless otherwise noted.

ALL CONSTRUCTION TO CONFORM TO CITY STANDARDS AND SPECIFICATIONS IN RIGHT OF WAY

MHTN ARCHITECTS
MHTN Architects, Inc.
420 East South Temple
Suite 100
Salt Lake City, Utah 84111
Telephone (801) 595-6700
Telefax (801) 595-6717
www.mhtn.com

OGDEN SCHOOL DISTRICT
Empowering Excellence Through Education

OGDEN SCHOOL DISTRICT
HIGHLAND JUNIOR HIGH SCHOOL REMODEL
325 GRAMERCY AVE.
OGDEN, UTAH 84404

©2011 MHTN ARCHITECTS, INC.
Drawings, written material, and design concepts shall not be used or reproduced in whole or part in any form or format without prior written consent of MHTN Architects, Inc. Do not scale drawings. Use only given dimensions only. If not shown, verify correct dimensions with the Architect. Contractor shall check and verify all dimensions and conditions at job site.

SEAL

MHTN PROJECT NO. 2015505

DRAWN BY: Author CHECKED BY: Checker

ISSUED:

NO.	DATE	DESCRIPTION

CONTRACTOR TO VERIFY DRAWINGS IN FIELD USE REFLECT LAST REVISION DATE.

NO.	DATE	DESCRIPTION

SHEET NAME
CAFETERIA SITE PLAN

CONSTRUCTION DOCUMENTS
APRIL 15, 2015

SHEET NUMBER

CS102

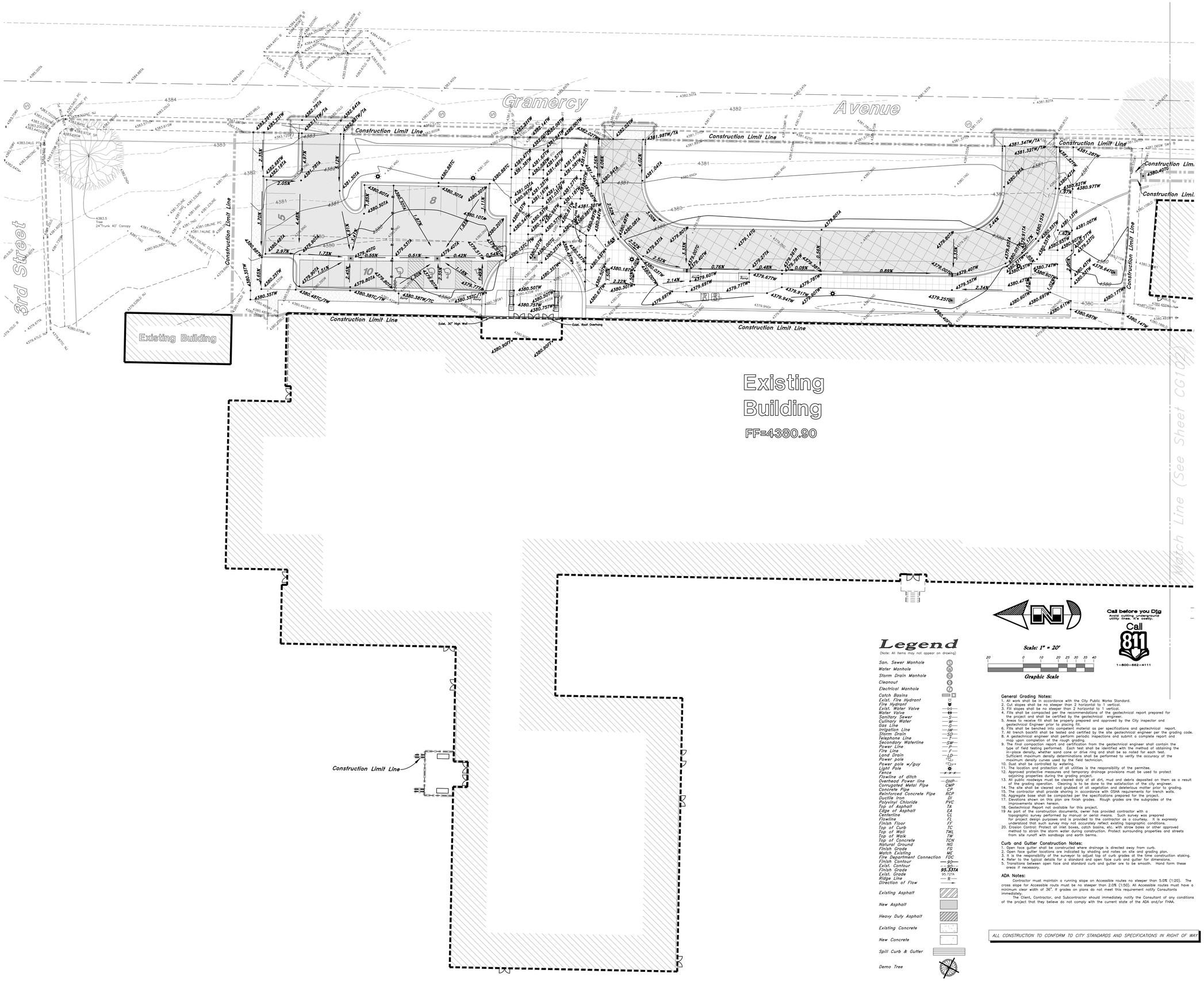

Legend

(Note: All items may not appear on drawing)

San. Sewer Manhole	S
Water Manhole	W
Storm Drain Manhole	D
Cleanout	C
Electrical Manhole	E
Catch Basins	
Exist. Fire Hydrant	
Fire Hydrant	
Exist. Water Valve	—WV—
Water Valve	
Sanitary Sewer	—S—
Culinary Water	—W—
Gas Line	—G—
Irrigation Line	—IW—
Storm Drain	—SD—
Telephone Line	—T—
Secondary Waterline	—SW—
Power Line	—P—
Fire Line	—F—
Land Drain	—LD—
Power pole	
Power pole w/guy	
Light Pole	
Fence	x x x
Flowline of ditch	
Overhead Power line	—OHP—
Corrugated Metal Pipe	CMP
Concrete Pipe	CP
Reinforced Concrete Pipe	RCP
Ductile Iron	DI
Polyvinyl Chloride	PVC
Top of Asphalt	TA
Edge of Asphalt	EA
Centerline	CL
Flowline	FL
Finish Floor	FF
Top of Curb	TC
Top of Wall	TWL
Top of Walk	TW
Top of Concrete	TCN
Natural Ground	NG
Finish Grade	FG
Match Existing	ME
Fire Department Connection	FDC
Finish Contour	—90—
Exist. Contour	90
Finish Grade	95.33TA
Exist. Grade	95.72TA
Ridge Line	— R —
Direction of Flow	
Existing Asphalt	
New Asphalt	
Heavy Duty Asphalt	
Existing Concrete	
New Concrete	
Spill Curb & Gutter	
Demo Tree	

Scale: 1" = 20'

20 0 10 20 25 30 35 40

Graphic Scale

Call before you Dig
Avoid cutting underground utility lines. It's costly.
Call 811
1-800-662-4111

General Grading Notes:

1. All work shall be in accordance with the City Public Works Standard.
2. Cut slopes shall be no steeper than 2 horizontal to 1 vertical.
3. Fill slopes shall be no steeper than 2 horizontal to 1 vertical.
4. Fills shall be compacted per the recommendations of the geotechnical report prepared for the project and shall be certified by the geotechnical engineer.
5. Areas to receive fill shall be properly prepared and approved by the City inspector and geotechnical Engineer prior to placing fill.
6. Fills shall be benched into competent material as per specifications and geotechnical report.
7. All trench backfill shall be tested and certified by the site geotechnical engineer per the grading code.
8. A geotechnical engineer shall perform periodic inspections and submit a complete report and map upon completion of the rough grading.
9. The final compaction report and certification from the geotechnical engineer shall contain the type of field testing performed. Each test shall be identified with the method of obtaining the in-place density, whether sand cone or drive ring and shall be so noted for each test. Sufficient maximum density determinations shall be performed to verify the accuracy of the maximum density curves used by the field technician.
10. Dust shall be controlled by watering.
11. The location and protection of all utilities is the responsibility of the permitee.
12. Approved protective measures and temporary drainage provisions must be used to protect adjoining properties during the grading project.
13. All public roadways must be cleaned daily of all dirt, mud and debris deposited on them as a result of the grading operation. Cleaning is to be done to the satisfaction of the city engineer.
14. Trees shall be cleared and grubbed of all vegetation and deleterious matter prior to grading.
15. The contractor shall provide shoring in accordance with OSHA requirements for trench walls.
16. Aggregate base shall be compacted per the specifications prepared for the project.
17. Elevations shown on this plan are finish grades. Rough grades are the subgrades of the improvements shown hereon.
18. Geotechnical Report not available for this project.
19 As part of the construction documents, owner has provided contractor with a topographic survey performed by manual or aerial means. Such survey was prepared for project design purposes and is provided to the contractor as a courtesy. It is expressly understood that such survey may not accurately reflect existing topographic conditions.
20. Erosion Control: Protect all inlet boxes, catch basins, etc. with straw bales or other approved method to strain the storm water during construction. Protect surrounding properties and streets from site runoff with sandbags and earth berms.

Curb and Gutter Construction Notes:

1. Open face gutter shall be constructed where drainage is directed away from curb.
2. Open face gutter locations are indicated by shading and notes on site and grading plan.
3. It is the responsibility of the surveyor to adjust top of curb grades at the time construction staking.
4. Refer to the typical details for a standard and open face curb and gutter for dimensions.
5. Transitions between open face and standard curb and gutter are to be smooth. Hand form these areas if necessary.

ADA Notes:

Contractor must maintain a running slope on Accessible routes no steeper than 5.0% (1:20). The cross slope for Accessible route must be no steeper than 2.0% (1:50). All Accessible routes must have a minimum clear width of 36". If grades on plans do not meet this requirement notify Consultants immediately.

The Client, Contractor, and Subcontractor should immediately notify the Consultant of any conditions of the project that they believe do not comply with the current state of the ADA and/or FHAA.

ALL CONSTRUCTION TO CONFORM TO CITY STANDARDS AND SPECIFICATIONS IN RIGHT OF WAY

MHTN ARCHITECTS

MHTN Architects, Inc.
420 East South Temple
Suite 100
Salt Lake City, Utah 84111
Telephone (801) 595-6700
Telefax (801) 595-6717
www.mhtn.com

OGDEN SCHOOL DISTRICT
Empowering Excellence Through Education

OGDEN SCHOOL DISTRICT

HIGHLAND JUNIOR HIGH SCHOOL REMODEL

325 GRAMERCY AVE.
OGDEN, UTAH 84404

©2011 MHTN ARCHITECTS, INC.

Drawings, written material, and design concepts shall not be used or reproduced in whole or part in any form or format without prior written consent of MHTN Architects, Inc. Do not scale drawings. Use given dimensions only. If not shown, verify correct dimensions with the Architect. Contractor shall check and verify all dimensions and conditions at job site.

SEAL

LICENSED PROFESSIONAL ENGINEER
No. 166484
MARK EUGENE RABBITT
4-15-15
STATE OF UTAH

MHTN PROJECT NO. 2015505

DRAWN BY: Author CHECKED BY: Checker

ISSUED:

NO.	DATE	DESCRIPTION

CONTRACTOR TO VERIFY DRAWINGS IN FIELD USE REFLECT LAST REVISION DATE.

NO.	DATE	DESCRIPTION

SHEET NAME

PARKING LOT GRADING & DRAINAGE PLAN

CONSTRUCTION DOCUMENTS
APRIL 15, 2015

SHEET NUMBER

CG101

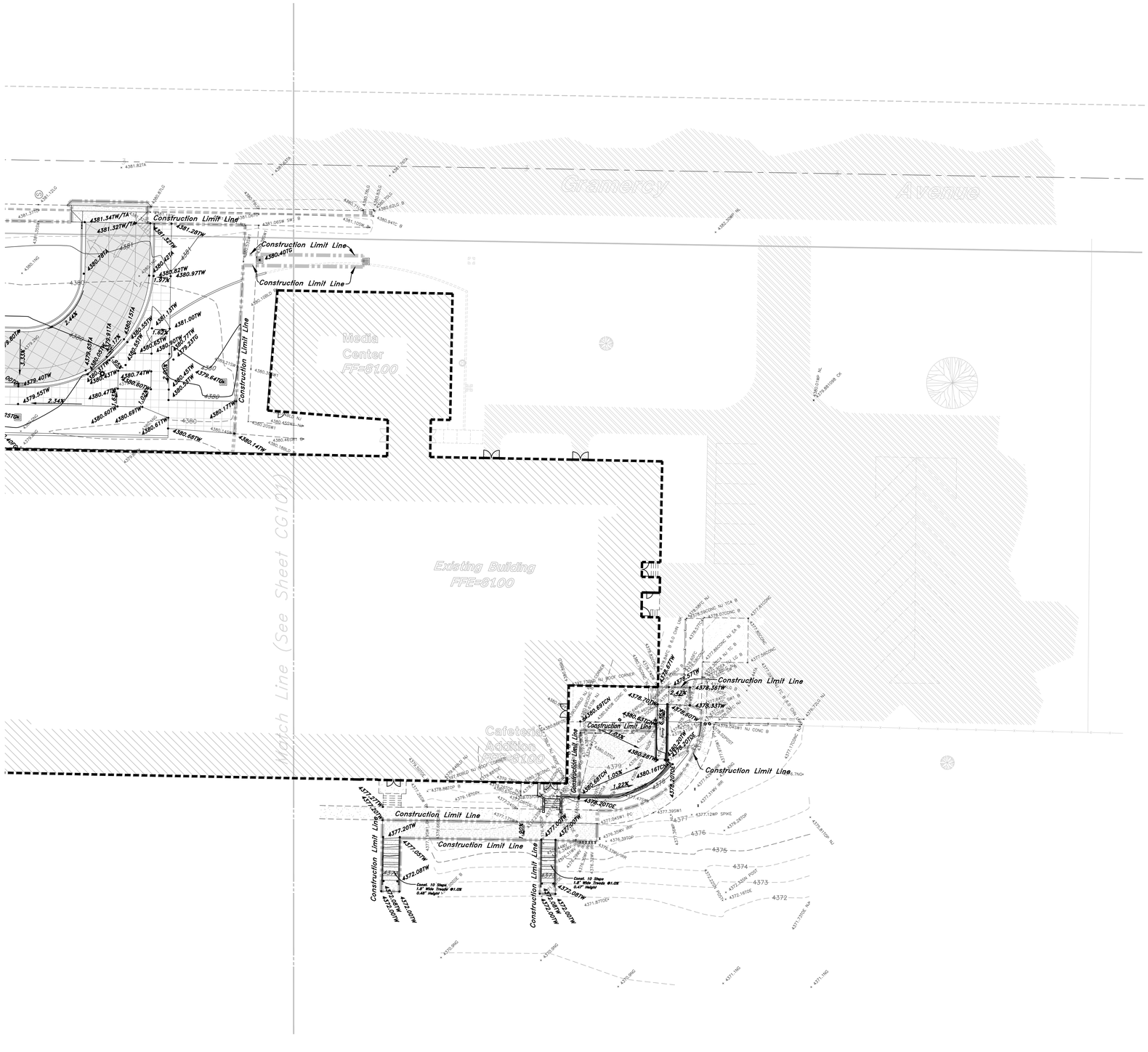

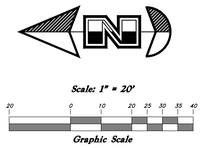

Legend

(Note: All items may not appear on drawing)

San. Sewer Manhole	S
Water Manhole	W
Storm Drain Manhole	D
Cleanout	C
Electrical Manhole	E
Catch Basins	
Exist. Fire Hydrant	
Fire Hydrant	
Exist. Water Valve	
Water Valve	
Sanitary Sewer	—S—
Culinary Water	—W—
Gas Line	—G—
Irrigation Line	—IW—
Storm Drain	—SD—
Telephone Line	—T—
Secondary Waterline	—SW—
Power Line	—P—
Fire Line	—F—
Land Drain	—LD—
Power pole	
Power pole w/guy	
Light Pole	
Fence	x x x
Flowline of ditch	
Overhead Power line	OHP
Corrugated Metal Pipe	CMP
Concrete Pipe	CP
Reinforced Concrete Pipe	RCP
Ductile Iron	DI
Polyvinyl Chloride	PVC
Top of Asphalt	TA
Edge of Asphalt	EA
Centerline	CL
Flowline	FL
Finish Floor	FF
Top of Curb	TC
Top of Wall	TWL
Top of Walk	TW
Top of Concrete	TCN
Natural Ground	NG
Finish Grade	FG
Match Existing	ME
Fire Department Connection	FDC
Finish Contour	—92—
Exist. Contour	—90—
Finish Grade	95.55TA
Exist. Grade	95.72TA
Ridge Line	—R—
Direction of Flow	
Existing Asphalt	
New Asphalt	
Heavy Duty Asphalt	
Existing Concrete	
New Concrete	
Spill Curb & Gutter	
Demo Tree	

Call before you Dig
Avoid cutting underground utility lines. It's costly.
Call 811
1-800-662-4111

General Grading Notes:

1. All work shall be in accordance with the City Public Works Standard.
2. Cut slopes shall be no steeper than 2 horizontal to 1 vertical.
3. Fill slopes shall be no steeper than 2 horizontal to 1 vertical.
4. Fills shall be compacted per the recommendations of the geotechnical report prepared for the project and shall be certified by the geotechnical engineer.
5. Areas to receive fill shall be properly prepared and approved by the City inspector and geotechnical Engineer prior to placing fill.
6. Fills shall be benched into competent material as per specifications and geotechnical report.
7. All trench backfill shall be tested and certified by the site geotechnical engineer per the grading code.
8. A geotechnical engineer shall perform periodic inspections and submit a complete report and map upon completion of the rough grading.
9. The final compaction report and certification from the geotechnical engineer shall contain the type of field testing performed. Each test shall be identified with the method of obtaining the in-place density, whether sand cone or drive ring and shall be so noted for each test. Sufficient maximum density determinations shall be performed to verify the accuracy of the maximum density curves used by the field technician.
10. Dust shall be controlled by watering.
11. The location and protection of all utilities is the responsibility of the permitee.
12. Approved protective measures and temporary drainage provisions must be used to protect adjoining properties during the grading project.
13. All public roadways must be cleared daily of all dirt, mud and debris deposited on them as a result of the grading operation. Cleaning is to be done to the satisfaction of the city engineer.
14. The site shall be cleared and grubbed of all vegetation and deleterious matter prior to grading.
15. The contractor shall provide shoring in accordance with OSHA requirements for trench walls.
16. Aggregate base shall be compacted per the specifications prepared for the project.
17. Elevations shown on this plan are finish grades. Rough grades are the subgrades of the improvements shown hereon.
18. Geotechnical Report not available for this project.
19 As part of the construction documents, owner has provided contractor with a topographic survey performed by manual or aerial means. Such survey was prepared for project design purposes and is provided to the contractor as a courtesy. It is expressly understood that such survey may not accurately reflect existing topographic conditions.
20. Erosion Control: Protect all inlet boxes, catch basins, etc. with straw bales or other approved method to strain the storm water during construction. Protect surrounding properties and streets from site runoff with sandbags and earth berms.

Curb and Gutter Construction Notes:

1. Open face gutter shall be constructed where drainage is directed away from curb.
2. Open face gutter locations are indicated by shading and notes on site and grading plan.
3. It is the responsibility of the surveyor to adjust top of curb grades at the time construction staking.
4. Refer to the typical details for a standard and open face curb and gutter for dimensions.
5. Transitions between open face and standard curb and gutter are to be smooth. Hand form these areas if necessary.

ADA Notes:

Contractor must maintain a running slope on Accessible routes no steeper than 5.0% (1:20). The cross slope for Accessible routs must be no steeper than 2.0% (1:50). All Accessible routes must have a minimum clear width of 36". If grades on plans do not meet this requirement notify Consultants immediately.

The Client, Contractor, and Subcontractor should immediately notify the Consultant of any conditions of the project that they believe do not comply with the current state of the ADA and/or FHAA.

ALL CONSTRUCTION TO CONFORM TO CITY STANDARDS AND SPECIFICATIONS IN RIGHT OF WAY

MHTN
ARCHITECTS
MHTN Architects, Inc.
420 East South Temple
Suite 100
Salt Lake City, Utah 84111
Telephone (801) 595-6700
Telefax (801) 595-6717
www.mhtn.com

OGDEN SCHOOL DISTRICT
Empowering Excellence Through Education

OGDEN SCHOOL DISTRICT
HIGHLAND JUNIOR HIGH SCHOOL REMODEL
325 GRAMERCY AVE.
OGDEN, UTAH 84404

©2011 MHTN ARCHITECTS, INC.
Drawings, written material, and design concepts shall not be used or reproduced in whole or part in any form or format without prior written consent of MHTN Architects, Inc. Do not scale drawings. Use given dimensions only. If not shown, verify correct dimensions with the Architect. Contractor shall check and verify all dimensions and conditions at job site.

SEAL

MHTN PROJECT NO. 2015505

DRAWN BY: Author CHECKED BY: Checker

ISSUED:

NO.	DATE	DESCRIPTION

CONTRACTOR TO VERIFY DRAWINGS IN FIELD USE REFLECT LAST REVISION DATE.

NO.	DATE	DESCRIPTION

SHEET NAME
CAFETERIA GRADING & DRAINAGE PLAN

CONSTRUCTION DOCUMENTS
APRIL 15, 2015

SHEET NUMBER
CG102

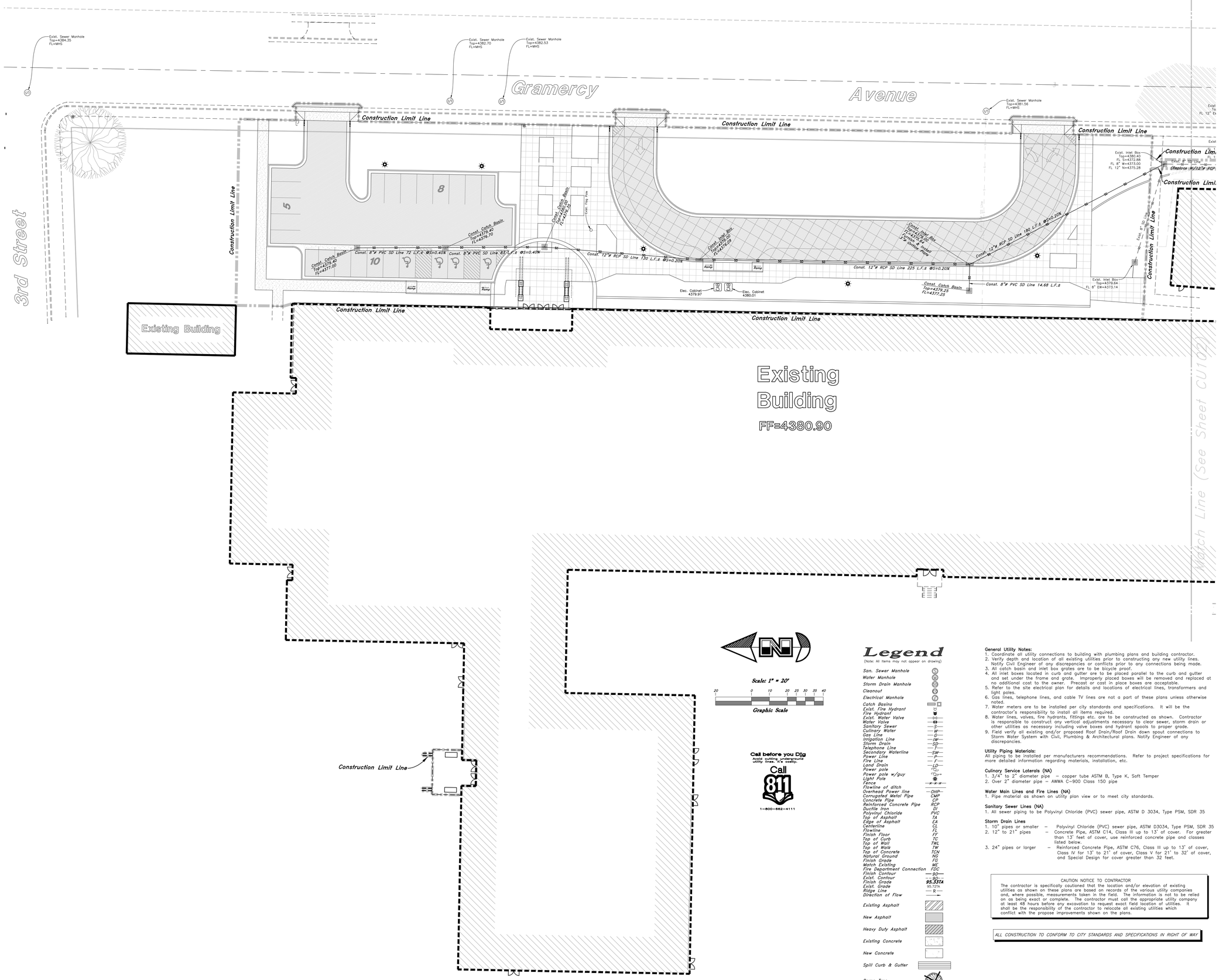

Scale: 1" = 20'

20 0 10 20 25 30 35 40

Graphic Scale

Call before you Dig
Avoid cutting underground utility lines. It's costly.
Call 811
1-800-662-4111

Legend

(Note: All items may not appear on drawing)

San. Sewer Manhole	S
Water Manhole	W
Storm Drain Manhole	SD
Cleanout	C
Electrical Manhole	E
Catch Basins	
Exist. Fire Hydrant	
Fire Hydrant	
Exist. Water Valve	—⋈—
Water Valve	
Sanitary Sewer	—S—
Culinary Water	—W—
Gas Line	—G—
Irrigation Line	—IW—
Storm Drain	—SD—
Telephone Line	—T—
Secondary Waterline	—SW—
Power Line	—P—
Fire Line	—F—
Land Drain	—LD—
Power pole	
Power pole w/guy	
Light Pole	
Fence	x x x
Flowline of ditch	
Overhead Power line	—OHP—
Corrugated Metal Pipe	CMP
Concrete Pipe	CP
Reinforced Concrete Pipe	RCP
Ductile Iron	DI
Polyvinyl Chloride	PVC
Top of Asphalt	TA
Edge of Asphalt	EA
Centerline	CL
Flowline	FL
Finish Floor	FF
Top of Curb	TC
Top of Wall	TWL
Top of Walk	TW
Top of Concrete	TCN
Natural Ground	NG
Finish Grade	FG
Match Existing	ME
Fire Department Connection	FDC
Finish Contour	—90—
Exist. Contour	—90—
Finish Grade	95.33TA
Exist. Grade	95.72TA
Ridge Line	—R—
Direction of Flow	
Existing Asphalt	
New Asphalt	
Heavy Duty Asphalt	
Existing Concrete	
New Concrete	
Spill Curb & Gutter	
Demo Tree	

General Utility Notes:

1. Coordinate all utility connections to building with plumbing plans and building contractor.
2. Verify depth and location of all existing utilities prior to constructing any new utility lines. Notify Civil Engineer of any discrepancies or conflicts prior to any connections being made.
3. All catch basin and inlet box grates are to be bicycle proof.
4. All inlet boxes located in curb and gutter are to be placed parallel to the curb and gutter and set under the frame and grate. Improperly placed boxes will be removed and replaced at no additional cost to the owner. Precast or cast in place boxes are acceptable.
5. Refer to the site electrical plan for details and locations of electrical lines, transformers and light poles.
6. Gas lines, telephone lines, and cable TV lines are not a part of these plans unless otherwise noted.
7. Water meters are to be installed per city standards and specifications. It will be the contractor's responsibility to install all items required.
8. Water lines, valves, fire hydrants, fittings etc. are to be constructed as shown. Contractor is responsible to construct any vertical adjustments necessary to clear sewer, storm drain or other utilities as necessary including valve boxes and hydrant spools to proper grade.
9. Field verify all existing and/or proposed Roof Drain/Roof Drain down spout connections to Storm Water System with Civil, Plumbing & Architectural plans. Notify Engineer of any discrepancies.

Utility Piping Materials:

All piping to be installed per manufacturers recommendations. Refer to project specifications for more detailed information regarding materials, installation, etc.

Culinary Service Laterals (NA)

1. 3/4" to 2" diameter pipe – copper tube ASTM B, Type K, Soft Temper
2. Over 2" diameter pipe – AWWA C-900 Class 150 pipe

Water Main Lines and Fire Lines (NA)

1. Pipe material as shown on utility plan view or to meet city standards.

Sanitary Sewer Lines (NA)

1. All sewer piping to be Polyvinyl Chloride (PVC) sewer pipe, ASTM D 3034, Type PSM, SDR 35

Storm Drain Lines

1. 10" pipes or smaller – Polyvinyl Chloride (PVC) sewer pipe, ASTM D3034, Type PSM, SDR 35
2. 12" to 21" pipes – Concrete Pipe, ASTM C14, Class III up to 13' of cover. For greater than 13' feet of cover, use reinforced concrete pipe and classes listed below.
3. 24" pipes or larger – Reinforced Concrete Pipe, ASTM C76, Class III up to 13' of cover, Class IV for 13' to 21' of cover, Class V for 21' to 32' of cover, and Special Design for cover greater than 32 feet.

CAUTION NOTICE TO CONTRACTOR

The contractor is specifically cautioned that the location and/or elevation of existing utilities as shown on these plans are based on records of the various utility companies and, where possible, measurements taken in the field. The information is not to be relied on as being exact or complete. The contractor must call the appropriate utility company at least 48 hours before any excavation to request exact field location of utilities. It shall be the responsibility of the contractor to relocate all existing utilities which conflict with the propose improvements shown on the plans.

ALL CONSTRUCTION TO CONFORM TO CITY STANDARDS AND SPECIFICATIONS IN RIGHT OF WAY

MHTN ARCHITECTS
MHTN Architects, Inc.
420 East South Temple
Suite 100
Salt Lake City, Utah 84111
Telephone (801) 595-6700
Telefax (801) 595-6717
www.mhtn.com

OGDEN SCHOOL DISTRICT
Empowering Excellence Through Education

OGDEN SCHOOL DISTRICT
HIGHLAND JUNIOR HIGH SCHOOL REMODEL
325 GRAMERCY AVE.
OGDEN, UTAH 84404

©2011 MHTN ARCHITECTS, INC.

Drawings, written material, and design concepts shall not be used or reproduced in whole or part in any form or format without prior written consent of MHTN Architects, Inc. Do not scale drawings. Use given dimensions only. If not shown, verify correct dimensions with the Architect. Contractor shall check and verify all dimensions and conditions at job site.

SEAL

LICENSED PROFESSIONAL ENGINEER No. 166484 MARK EUGENE RABBITT 4-15-15 STATE OF UTAH

MHTN PROJECT NO. 2015505

DRAWN BY: Author CHECKED BY: Checker

ISSUED:

NO.	DATE	DESCRIPTION

CONTRACTOR TO VERIFY DRAWINGS IN FIELD USE REFLECT LAST REVISION DATE.

NO.	DATE	DESCRIPTION

SHEET NAME

PARKING LOT UTILITY PLAN

CONSTRUCTION DOCUMENTS
APRIL 15, 2015

SHEET NUMBER

CU101

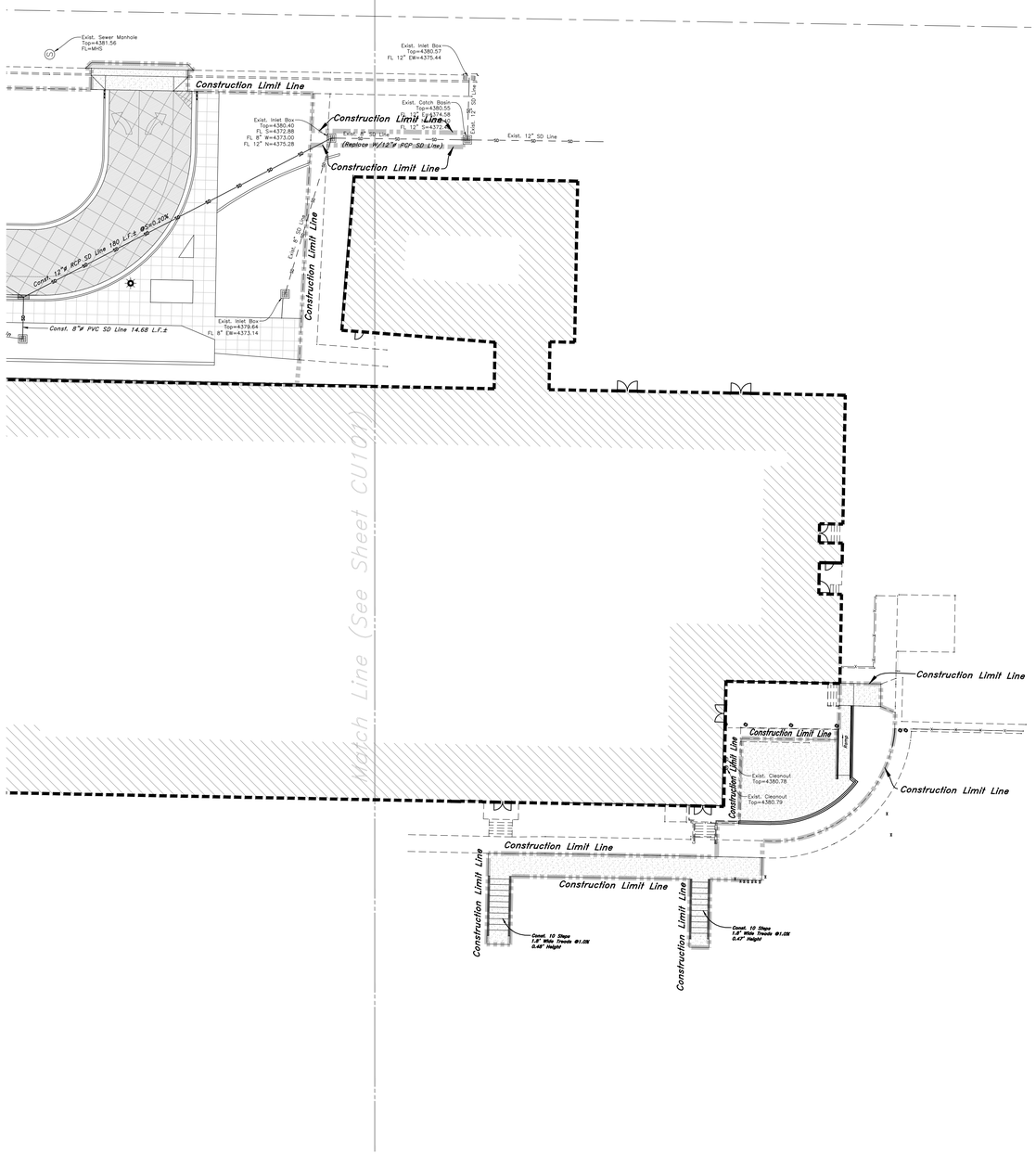

Scale: 1" = 20'

Graphic Scale

Legend

(Note: All items may not appear on drawing)

San. Sewer Manhole	
Water Manhole	
Storm Drain Manhole	
Cleanout	
Electrical Manhole	
Catch Basins	
Exist. Fire Hydrant	
Fire Hydrant	
Exist. Water Valve	
Water Valve	
Sanitary Sewer	—S—
Culinary Water	—W—
Gas Line	—G—
Irrigation Line	—IW—
Storm Drain	—SD—
Telephone Line	—T—
Secondary Waterline	—SW—
Power Line	—P—
Fire Line	—F—
Land Drain	—LD—
Power pole	
Power pole w/Guy	
Light Pole	
Fence	—x—x—
Flowline of ditch	
Overhead Power line	—OHP—
Corrugated Metal Pipe	CMP
Concrete Pipe	CP
Reinforced Concrete Pipe	RCP
Ductile Iron	DI
Polyvinyl Chloride	PVC
Top of Asphalt	TA
Edge of Asphalt	EA
Centerline	CL
Flowline	FL
Finish Floor	FF
Top of Curb	TC
Top of Wall	TWL
Top of Walk	TW
Top of Concrete	TCN
Natural Ground	NG
Finish Grade	FG
Match Existing	ME
Fire Department Connection	FDC
Finish Contour	—90—
Exist. Contour	—90—
Finish Grade	95.33TA
Exist. Grade	95.72TA
Ridge Line	—R—
Direction of Flow	
Existing Asphalt	
New Asphalt	
Heavy Duty Asphalt	
Existing Concrete	
New Concrete	
Spill Curb & Gutter	
Demo Tree	

Call before you Dig
Avoid cutting underground utility lines. It's easy.
Call 811
1-800-662-4111

General Utility Notes:

1. Coordinate all utility connections to building with plumbing plans and building contractor.
2. Verify depth and location of all existing utilities prior to constructing any new utility lines. Notify Civil Engineer of any discrepancies or conflicts prior to any connections being made.
3. All catch basin and inlet box grates are to be bicycle proof.
4. All inlet boxes located in curb and gutter are to be placed parallel to the curb and gutter and set under the frame and grate. Improperly placed boxes will be removed and replaced at no additional cost to the owner. Precast or cast in place boxes are acceptable.
5. Refer to the site electrical plan for details and locations of electrical lines, transformers and light poles.
6. Gas lines, telephone lines, and cable TV lines are not a part of these plans unless otherwise noted.
7. Water meters are to be installed per city standards and specifications. It will be the contractor's responsibility to install all items required.
8. Water lines, valves, fire hydrants, fittings etc. are to be constructed as shown. Contractor is responsible to construct any vertical adjustments necessary to clear sewer, storm drain or other utilities as necessary including valve boxes and hydrant spools to proper grade.
9. Field verify all existing and/or proposed Roof Drain/Roof Drain down spout connections to Storm Water System with Civil, Plumbing & Architectural plans. Notify Engineer of any discrepancies.

Utility Piping Materials:
All piping to be installed per manufacturers recommendations. Refer to project specifications for more detailed information regarding materials, installation, etc.

Culinary Service Laterals (NA)
1. 3/4" to 2" diameter pipe – copper tube ASTM B, Type K, Soft Temper
2. Over 2" diameter pipe – AWWA C-900 Class 150 pipe

Water Main Lines and Fire Lines (NA)
1. Pipe material as shown on utility plan view or to meet city standards.

Sanitary Sewer Lines (NA)
1. All sewer piping to be Polyvinyl Chloride (PVC) sewer pipe, ASTM D 3034, Type PSM, SDR 35

Storm Drain Lines
1. 10" pipes or smaller – Polyvinyl Chloride (PVC) sewer pipe, ASTM D3034, Type PSM, SDR 35
2. 12" to 21" pipes – Concrete Pipe, ASTM C14, Class III up to 13' of cover. For greater than 13' feet of cover, use reinforced concrete pipe and classes listed below.
3. 24" pipes or larger – Reinforced Concrete Pipe, ASTM C76, Class III up to 13' of cover, Class IV for 13' to 21' of cover, Class V for 21' to 32' of cover, and Special Design for cover greater than 32 feet.

CAUTION NOTICE TO CONTRACTOR
The contractor is specifically cautioned that the location and/or elevation of existing utilities as shown on these plans are based on records of the various utility companies and, where possible, measurements taken in the field. The information is not to be relied on as being exact or complete. The contractor must call the appropriate utility company at least 48 hours before any excavation to request exact field location of utilities. It shall be the responsibility of the contractor to relocate all existing utilities which conflict with the propose improvements shown on the plans.

ALL CONSTRUCTION TO CONFORM TO CITY STANDARDS AND SPECIFICATIONS IN RIGHT OF WAY

MHTN ARCHITECTS
MHTN Architects, Inc.
420 East South Temple
Suite 100
Salt Lake City, Utah 84111
Telephone (801) 595-6700
Telefax (801) 595-6717
www.mhtn.com

OGDEN SCHOOL DISTRICT
Empowering Excellence Through Education

OGDEN SCHOOL DISTRICT
HIGHLAND JUNIOR HIGH SCHOOL REMODEL
325 GRAMERCY AVE.
OGDEN, UTAH 84404

©2011 MHTN ARCHITECTS, INC.
Drawings, written material, and design concepts shall not be used or reproduced in whole or part in any form or format without prior written consent of MHTN Architects, Inc. Do not scale drawings. Use only given dimensions only. If not shown, verify correct dimensions with the Architect. Contractor shall check and verify all dimensions and conditions at job site.

SEAL

MHTN PROJECT NO. 2015505

DRAWN BY: Author CHECKED BY: Checker

ISSUED:

NO.	DATE	DESCRIPTION

CONTRACTOR TO VERIFY DRAWINGS IN FIELD USE REFLECT LAST REVISION DATE.

NO.	DATE	DESCRIPTION

SHEET NAME
CAFETERIA UTILITY PLAN

CONSTRUCTION DOCUMENTS
APRIL 15, 2015

SHEET NUMBER

CU102

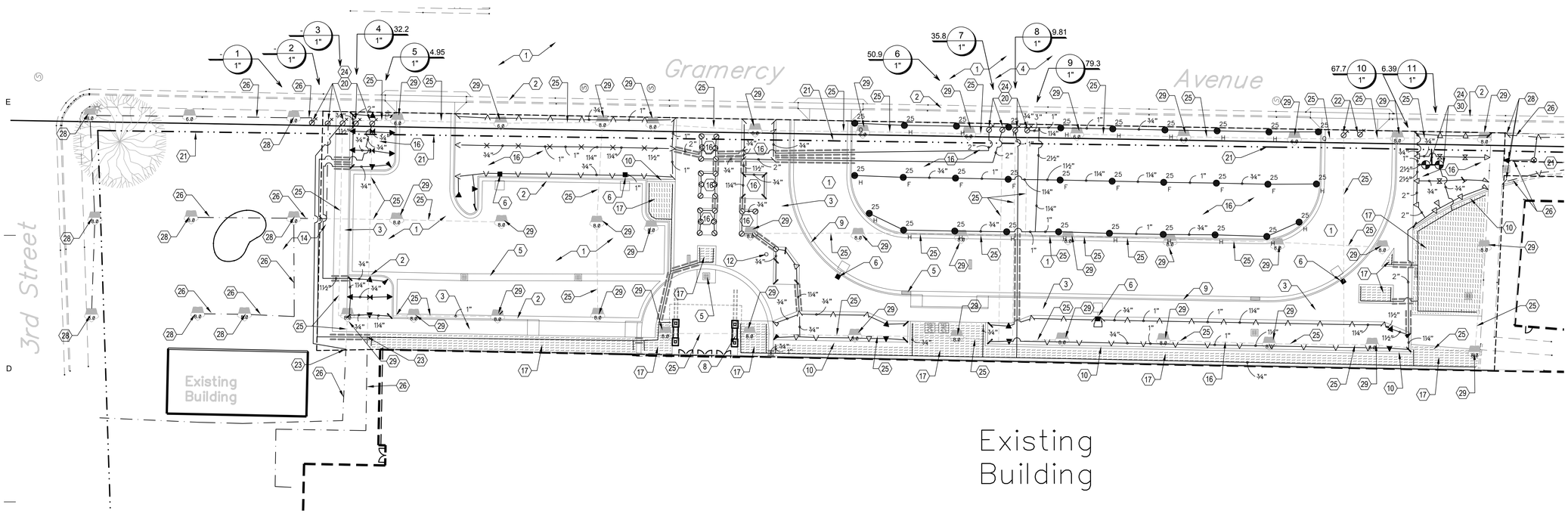

C1 IRRIGATION PLAN
1"=20'-0"
DETAIL-FILE

IRRIGATION KEYNOTES

1. ASPHALT PAVING
2. CONCRETE CURB & GUTTER
3. CONCRETE PAVING
4. CONCRETE STAIRS
5. CATCH BASIN
6. LIGHT POLE
7. CONCRETE WALL
8. CANOPY BASE
9. CONCRETE CURB
10. CONCRETE MOWSTRIP
11. CONCRETE RAMP
12. FLAGPOLE
13. UTILITY MANHOLE
14. EXISTING LAWN
15. APPROX. EDGE OF EXISTING LAWN
16. LAWN (SOD)
17. LANDSCAPE AREA
18. PROJECT LIMIT LINE
19. SRW WALL
20. EXISTING IRRIGATION VALVE. FIELD VERIFY LOCATION. MODIFY THE LOCATION AND LAYOUT AS REQUIRED DUE TO CONSTRUCTION.
21. EXISTING IRRIGATION MAIN LINE. FIELD VERIFY LOCATION. MODIFY ROUTING AND DEPTH AS REQUIRED DUE TO CONSTRUCTION.
22. EXISTING VALVE MANIFOLD TO BE RELOCATED. CUT AND CAMP EXISTING PIPE AT EXISTING TEE.
23. CONNECT NEW LATERAL LINE TO EXISTING LATERAL LINE
24. CONNECT NEW LATERAL LINE TO EXISTING VALVE
25. EXISTING LATERAL LINE TO BE REMOVED
26. EXISTING LATERAL LINE TO REMAIN
27. EXISTING IRRIGATION CONTROLLER
28. EXISTING IRRIGATION HEAD TO REMAIN
29. EXISTING IRRIGATION HEAD TO BE REMOVED
30. RELOCATED VALVE MANIFOLD - CONNECT TO EXISTING MANIFOLD

MHTN ARCHITECTS
MHTN Architects, Inc.
420 East South Temple
Suite 100
Salt Lake City, Utah 84111
Telephone (801) 595-6700
Telefax (801) 595-6717
www.mhtn.com

OGDEN SCHOOL DISTRICT
Empowering Excellence Through Education

OGDEN SCHOOL DISTRICT
HIGHLAND JUNIOR HIGH SCHOOL REMODEL
325 GRAMERCY AVE.
OGDEN, UTAH 84404

©2011 MHTN ARCHITECTS, INC.
Drawings, written material, and design concepts shall not be used or reproduced in whole or part in any form or format without prior written consent of MHTN Architects, Inc. Do not scale drawings. Use given dimensions only. If not shown, verify correct dimensions with the Architect. Contractor shall check and verify all dimensions and conditions at job site.

SEAL

LICENSED LANDSCAPE ARCHITECT
RANDALL C. BOUDRERO
No. 0018600010
STATE OF UTAH

MHTN PROJECT NO. 2015505

DRAWN BY: Author CHECKED BY: Checker

ISSUED:

NO.	DATE	DESCRIPTION

CONTRACTOR TO VERIFY DRAWINGS IN FIELD USE REFLECT LAST REVISION DATE.

NO.	DATE	DESCRIPTION

SHEET NAME
IRRIGATION PLAN

CONSTRUCTION DOCUMENTS
APRIL 15, 2015

SHEET NUMBER
LI1.01

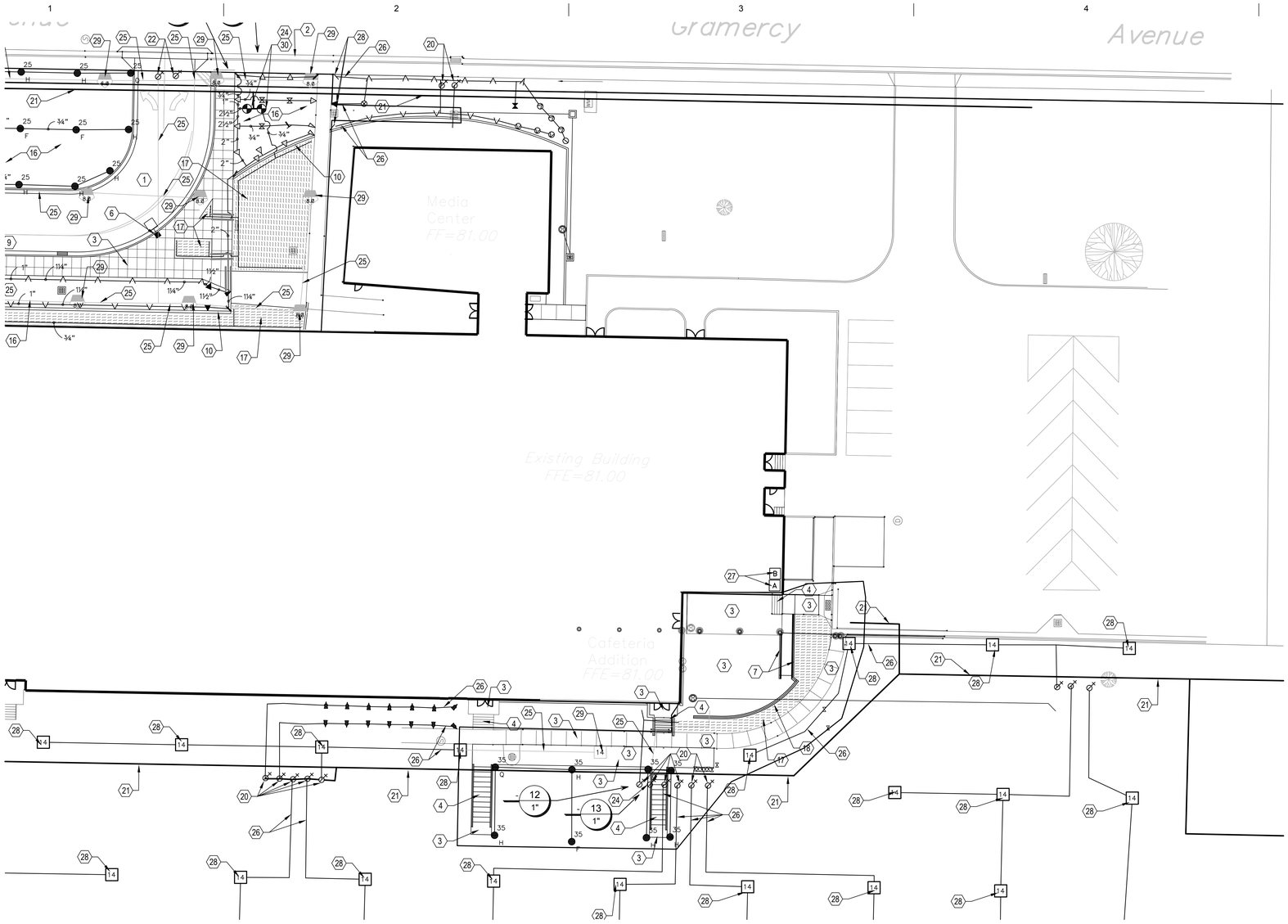

C1 IRRIGATION PLAN
1"=20'-0"
DETAIL-FILE

IRRIGATION KEYNOTES

1. ASPHALT PAVING
2. CONCRETE CURB & GUTTER
3. CONCRETE PAVING
4. CONCRETE STAIRS
5. CATCH BASIN
6. LIGHT POLE
7. CONCRETE WALL
8. CANOPY BASE
9. CONCRETE CURB
10. CONCRETE MOWSTRIP
11. CONCRETE RAMP
12. FLAGPOLE
13. UTILITY MANHOLE
14. EXISTING LAWN
15. APPROX. EDGE OF EXISTING LAWN
16. LAWN (SOD)
17. LANDSCAPE AREA
18. PROJECT LIMIT LINE
19. SRW WALL
20. EXISTING IRRIGATION VALVE. FIELD VERIFY LOCATION. MODIFY THE LOCATION AND LAYOUT AS REQUIRED DUE TO CONSTRUCTION.
21. EXISTING IRRIGATION MAIN LINE. FIELD VERIFY LOCATION. MODIFY ROUTING AND DEPTH AS REQUIRED DUE TO CONSTRUCTION.
22. EXISTING VALVE MANIFOLD TO BE RELOCATED. CUT AND CAMP EXISTING PIPE AT EXISTING TEE.
23. CONNECT NEW LATERAL LINE TO EXISTING LATERAL LINE
24. CONNECT NEW LATERAL LINE TO EXISTING VALVE
25. EXISTING LATERAL LINE TO BE REMOVED
26. EXISTING LATERAL LINE TO REMAIN
27. EXISTING IRRIGATION CONTROLLER
28. EXISTING IRRIGATION HEAD TO REMAIN
29. EXISTING IRRIGATION HEAD TO BE REMOVED
30. RELOCATED VALVE MANIFOLD - CONNECT TO EXISTING MANIFOLD

MHTN ARCHITECTS
MHTN Architects, Inc.
420 East South Temple
Suite 100
Salt Lake City, Utah 84111
Telephone (801) 595-6700
Telefax (801) 595-6717
www.mhtn.com

OGDEN SCHOOL DISTRICT
Empowering Excellence Through Education

OGDEN SCHOOL DISTRICT
HIGHLAND JUNIOR HIGH SCHOOL REMODEL
325 GRAMERCY AVE.
OGDEN, UTAH 84404

©2011 MHTN ARCHITECTS, INC.
Drawings, written material, and design concepts shall not be used or reproduced in whole or part in any form or format without prior written consent of MHTN Architects, Inc. Do not scale drawings. Use given dimensions only. Check and verify all dimensions and conditions at job site. Contractor shall check and verify all dimensions and conditions at job site.

SEAL

LICENSED LANDSCAPE ARCHITECT
RANDALL C. BOUDRERO
No. 0018603010
STATE OF UTAH

MHTN PROJECT NO. 2015505

DRAWN BY: Author CHECKED BY: Checker

ISSUED:

NO.	DATE	DESCRIPTION

CONTRACTOR TO VERIFY DRAWINGS IN FIELD USE REFLECT LAST REVISION DATE.

NO.	DATE	DESCRIPTION

SHEET NAME
IRRIGATION PLAN

CONSTRUCTION DOCUMENTS
APRIL 15, 2015

SHEET NUMBER
LI1.02

IRRIGATION REMODEL NOTES

THIS CONTRACTOR SHALL BE RESPONSIBLE FOR FIELD VERIFICATION OF THE EXISTING SPRINKLER IRRIGATION SYSTEM IN TERMS OF FLOW CAPACITY, VALVE WIRING, VALVE AND HEAD LAYOUT AND CONTROLLER CAPACITY.

THIS CONTRACTOR SHALL BE RESPONSIBLE FOR THE COMPLETE REMODEL OF A SECTION OF THE EXISTING IRRIGATION SYSTEM AS SHOWN AND FOR PROVIDING FOR FULL COVERAGE OF ALL SYSTEM HEADS AND FOR THE FULL AND COMPLETE OPERATION OF BOTH THE NEW AND EXISTING SYSTEM IN THE AREAS BEING MODIFIED.

THIS CONTRACTOR SHALL COORDINATE ALL DEMOLITION WORK AND TIMES WITH THE OWNER.

MAINTAIN AND PROTECT AS MUCH OF THE EXISTING IRRIGATION SYSTEM AS POSSIBLE AND FEASIBLE AND STILL PROVIDE FOR FULL COVERAGE OF THE ENTIRE AREA. KEEP ALL LAWN AREA HEADS ON A SEPARATE CIRCUIT FROM SHRUB AREA HEADS.

THE EXISTING IRRIGATION SYSTEMS NOTED TO REMAIN IN USE SHALL BE PATCHED AND REPAIRED AS NECESSARY. MAINTAIN OPERATION OF THE EXISTING SYSTEM AS REQUIRED TO PROTECT EXISTING PLANT MATERIAL. CONTRACTOR SHALL BE RESPONSIBLE FOR DAMAGE OR DEATH OF EXISTING PLANT MATERIAL.

ALL SALVAGED HEADS SHALL BE RE-USED IN THE NEW SYSTEM, IF COMPATIBLE WITH NEW HEADS, OR RETURNED TO THE OWNER.

THIS CONTRACTOR SHALL BE RESPONSIBLE FOR PROTECTING THE EXISTING VALVE WIRING AND RE-ROUTING AS SHOWN AND AS REQUIRED. MINIMIZE THE USE OF WIRE SPLICES. PROVIDE TEMPORARY WIRING AS REQUIRED TO KEEP THE EXISTING SYSTEM IN OPERATION.

REPAIR DAMAGE TO EXISTING IRRIGATION SYSTEM AND LAWN RESULTING FROM CONSTRUCTION OPERATIONS.

IRRIGATION SCHEDULE

SYMBOL	MANUFACTURER/MODEL/DESCRIPTION
Q Q Q Q	Rain Bird 1804-PRS-NP 8 Series MPR Turf Spray 4.0" Pop-Up Sprinkler with Co-Molded Wiper Seal. 1/2" NPT Female Threaded Inlet. Pressure Regulating. With Non Potable Purple Cap.
Q T H F	Rain Bird 1804-PRS-NP 10 Series MPR Turf Spray 4.0" Pop-Up Sprinkler with Co-Molded Wiper Seal. 1/2" NPT Female Threaded Inlet. Pressure Regulating. With Non Potable Purple Cap.
Q T H TQ F	Rain Bird 1804-PRS-NP 12 Series MPR Turf Spray 4.0" Pop-Up Sprinkler with Co-Molded Wiper Seal. 1/2" NPT Female Threaded Inlet. Pressure Regulating. With Non Potable Purple Cap.
Q T H TQ F	Rain Bird 1804-PRS-NP 15 Series MPR Turf Spray 4.0" Pop-Up Sprinkler with Co-Molded Wiper Seal. 1/2" NPT Female Threaded Inlet. Pressure Regulating. With Non Potable Purple Cap.
8SHE-VAN 12HE-VAN 10HE-VAN 15HE-VAN	Rain Bird 1804-PRS-NP ADJ Turf Spray 4.0" Pop-Up Sprinkler with Co-Molded Wiper Seal. 1/2" NPT Female Threaded Inlet. Pressure Regulating. With Non Potable Purple Cap.

SYMBOL	MANUFACTURER/MODEL/DESCRIPTION	PSI	RADIUS
25 ARC	Rain Bird 5006-PL-MPR-SAM-R-NP Turf Rotor, 6.0" Pop-Up, Plastic Riser, with Flow Shut-Off Device. Matched Precipitation Rotor (MPR Nozzle), Arc and Radius as per Symbol. 25 ft=red, 30 ft=green, 35ft=beige. With Check Valve, In-Stem Pressure Regulator, and Non Potable Purple Cap.	55	25'
35 ARC	Rain Bird 5006-PL-MPR-SAM-R-NP Turf Rotor, 6.0" Pop-Up, Plastic Riser, with Flow Shut-Off Device. Matched Precipitation Rotor (MPR Nozzle), Arc and Radius as per Symbol. 25 ft=red, 30 ft=green, 35ft=beige. With Check Valve, In-Stem Pressure Regulator, and Non Potable Purple Cap.	55	35'
8.8	Existing Rainbird 5505 rotor to Remain Existing Rotor		
8.8	Existing Rainbird 5505 rotor To be removed		
14	Existing Rain Bird 8005-SS		
14	Existing Rain Bird 8005 rotor to be removed		

SYMBOL	MANUFACTURER/MODEL
	Area to Receive Dripline Netafim TLDL-6-18 (18)

SYMBOL	MANUFACTURER/MODEL/DESCRIPTION	QTY
	Relocated Irrigation valves	
	Existing valve Existing Valve - field Verify location and Size	
A	Existing Controller Existing Controller 48 Stations	
B	Existing Controller Existing Controller 48 Stations	
	Irrigation Lateral Line: PVC Schedule 40	
	Existing Irrigation Lateral Line to remain	
	Existing Irrigation lateral line to be removed	
	Irrigation Mainline: PVC Schedule 40	
	Irrigation Mainline: PVC Schedule 40	
	Pipe Sleeve: PVC Class 200 SDR 21 Typical pipe sleeve for irrigation pipe. Pipe sleeve size shall allow for irrigation piping and their related couplings to easily slide through sleeving material. Extend sleeves 18 inches beyond edges of paving or construction.	

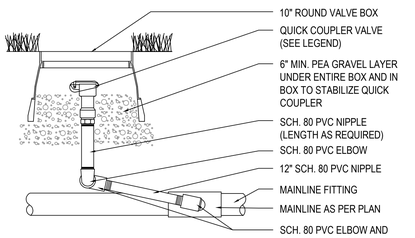

B2 QUICK COUPLER VALVE
1" = 1"
328406.43-07

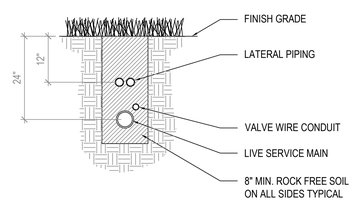

B2 TRENCH DETAIL
1" = 1"
328409.76-09

NOTE:
REFER TO THE SPECIFICATIONS FOR THE THRUST BLOCK SIZING CHART.

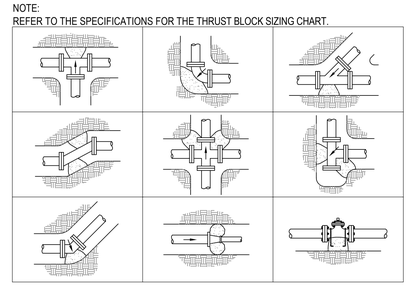

B3 THRUST BLOCKING
1" = 1"
328409.76-10

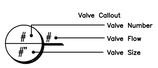

NOTE:
TOP OF HEAD SHALL BE SET FLUSH WITH FINISH GRADE AND SWING PIPE SHALL SLOPE TOWARDS LATERAL PIPE FOR COMPLETE DRAINAGE.

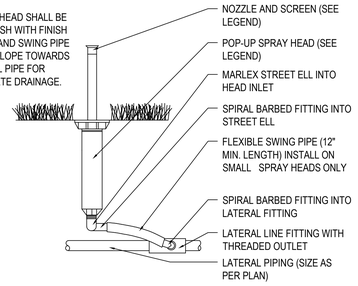

A1 POP-UP SPRAY HEAD
1" = 1"
328403.13-04

NOTE:
TOP OF HEAD SHALL BE SET FLUSH WITH FINISH GRADE AND SWING PIPE SHALL SLOPE TOWARDS LATERAL PIPE FOR COMPLETE DRAINAGE.

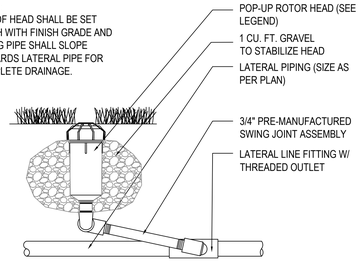

A2 POP-UP ROTOR HEAD
1" = 1"
328403.16-02

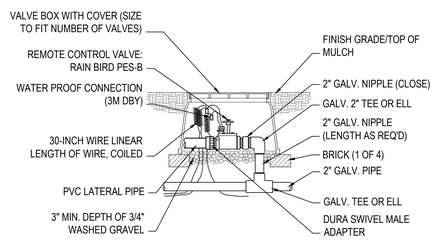

A3 REMOTE CONTROL VALVE
1" = 1'-0"
328406.13-06

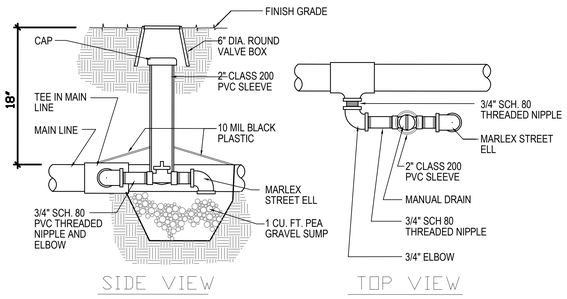

A4 MANUAL DRAIN VALVE
1 1/2" = 1'-0"
328406.19-04

FILE NAME

MHTN ARCHITECTS
MHTN Architects, Inc.
420 East South Temple
Suite 100
Salt Lake City, Utah 84111
Telephone (801) 595-6700
Telefax (801) 595-6717
www.mhtn.com

OGDEN SCHOOL DISTRICT
Empowering Excellence Through Education

OGDEN SCHOOL DISTRICT
HIGHLAND JUNIOR HIGH SCHOOL
REMODEL
325 GRAMERCY AVE.
OGDEN, UTAH 84404

©2011 MHTN ARCHITECTS, INC.
Drawings, written material, and design concepts shall not be used or reproduced in whole or in part in any form or format without prior written consent of MHTN Architects, Inc. Do not scale drawings. Use given dimensions only. If not shown, verify correct dimensions with the Architect. Contractor shall check and verify all dimensions and conditions at job site.

SEAL

LICENSED LANDSCAPE ARCHITECT
RANDALL C. BOUDRERO
No. 0018553010
STATE OF UTAH

MHTN PROJECT NO. 2015505

DRAWN BY: Author CHECKED BY: Checker

ISSUED:

NO	DATE	DESCRIPTION

CONTRACTOR TO VERIFY DRAWINGS IN FIELD USE REFLECT LAST REVISION DATE.

NO	DATE	DESCRIPTION

SHEET NAME
IRRIGATION DETAILS
CONSTRUCTION DOCUMENTS
APRIL 15, 2015

SHEET NUMBER
LI5.01

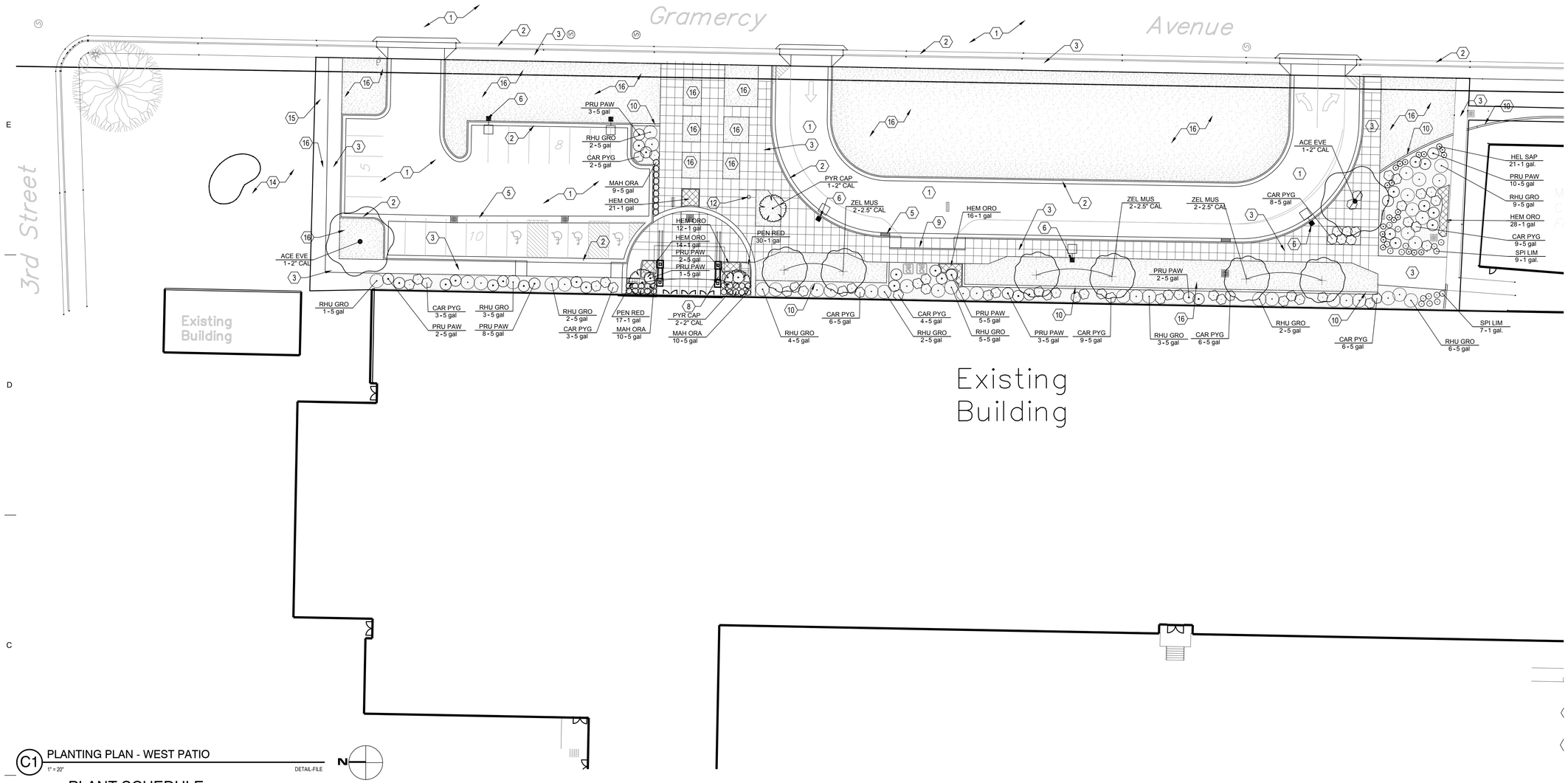

C1 PLANTING PLAN - WEST PATIO

1" = 20"

DETAIL-FILE

PLANT SCHEDULE

TREES	CODE	BOTANICAL NAME	COMMON NAME	CONT	CAL	REMARKS
	ACE EVE	Acer campestre `Evelyn`	Queen Elizabeth Maple	2" CAL	2"	
	PYR CAP	Pyrus calleryana `Capital`	Capital Callery Pear	2" CAL		
	ZEL MUS	Zelkova serrata `Musashino`	Sawleaf Zelkova	2.5" CAL	2.5" cal.	

SHRUBS	CODE	BOTANICAL NAME	COMMON NAME	CONT	REMARKS
	CAR PYG	Caragana pygmaea	Pygmy Peashrub	5 gal	
	HEL SAP	Helictotrichon sempervirens `Sapphire`	Blue Oat Grass	1 gal.	
	MAH ORA	Mahonia aquifollium `Compacta`	Compact Oragon Grape Holly	5 gal	
	PRU PAW	Prunus besseyi `Pawnee Buttes`	Sand Cherry	5 gal	
	RHU GRO	Rhus aromatica `Gro-Low`	Gro-Low Fragrant Sumac	5 gal	
	SPI LIM	Spiraea bumalda `Limemound` TM	Limemound Spirea	1 gal.	

SHRUB AREAS	CODE	BOTANICAL NAME	COMMON NAME	CONT	SPACING	REMARKS
	HEM ORO	Hemerocallis hybrid `Stella de Oro`	Stella de Oro Daylily	1 gal	20" o.c.	
	PEN RED	Penstemon mexicali `Red Rocks`	Penstemon	1 gal	12" o.c.	

GROUND COVERS	CODE	BOTANICAL NAME	COMMON NAME	CONT	SPACING	REMARKS
	AGG	Aggregate Crushed	1`` Crushed Aggregate	3" Deep		Install 3" deep over Weed Barrier Fabric
	LAWN	LAWN	SOD	Sod		See Specifications

PLANTING KEYNOTES

1. ASPHALT PAVING
2. CONCRETE CURB & GUTTER
3. CONCRETE PAVING
4. CONCRETE STAIRS
5. CATCH BASIN
6. LIGHT POLE
7. CONCRETE WALL
8. CANOPY BASE
9. CONCRETE CURB
10. CONCRETE MOWSTRIP
11. CONCRETE RAMP
12. FLAGPOLE
13. UTILITY MANHOLE
14. EXISTING LAWN
15. APPROX. EDGE OF EXISTING LAWN
16. LAWN (SOD)
17. LANDSCAPE AREA
18. PROJECT LIMIT LINE
19. SRW WALL

1" = 20"

DETAIL-FILE

MHTN ARCHITECTS
MHTN Architects, Inc.
420 East South Temple
Suite 100
Salt Lake City, Utah 84111
Telephone (801) 595-6700
Telefax (801) 595-6717
www.mhtn.com

OGDEN SCHOOL DISTRICT
Empowering Excellence Through Education

OGDEN SCHOOL DISTRICT
HIGHLAND JUNIOR HIGH SCHOOL
REMODEL
325 GRAMERCY AVE.
OGDEN, UTAH 84404

©2011 MHTN ARCHITECTS, INC.
Drawings, written material, and design concepts shall not be used or reproduced in whole or part in any form or format without prior written consent of MHTN ARCHITECTS, INC. Drawings are not to be scaled for dimensional only. If not shown, verify correct dimensions with the Architect. Contractor shall check and verify all dimensions and conditions at job site.

SEAL

LICENSED LANDSCAPE ARCHITECT
RANDALL C. BOUDRERO
No. 0010555010
STATE OF UTAH

MHTN PROJECT NO. 2015505

DRAWN BY: Author CHECKED BY: Checker

ISSUED:

NO.	DATE	DESCRIPTION

CONTRACTOR TO VERIFY DRAWINGS IN FIELD USE REFLECT LAST REVISION DATE.

NO.	DATE	DESCRIPTION

SHEET NAME

LANDSCAPE PLAN

CONSTRUCTION DOCUMENTS
APRIL 15, 2015

SHEET NUMBER

LP1.01

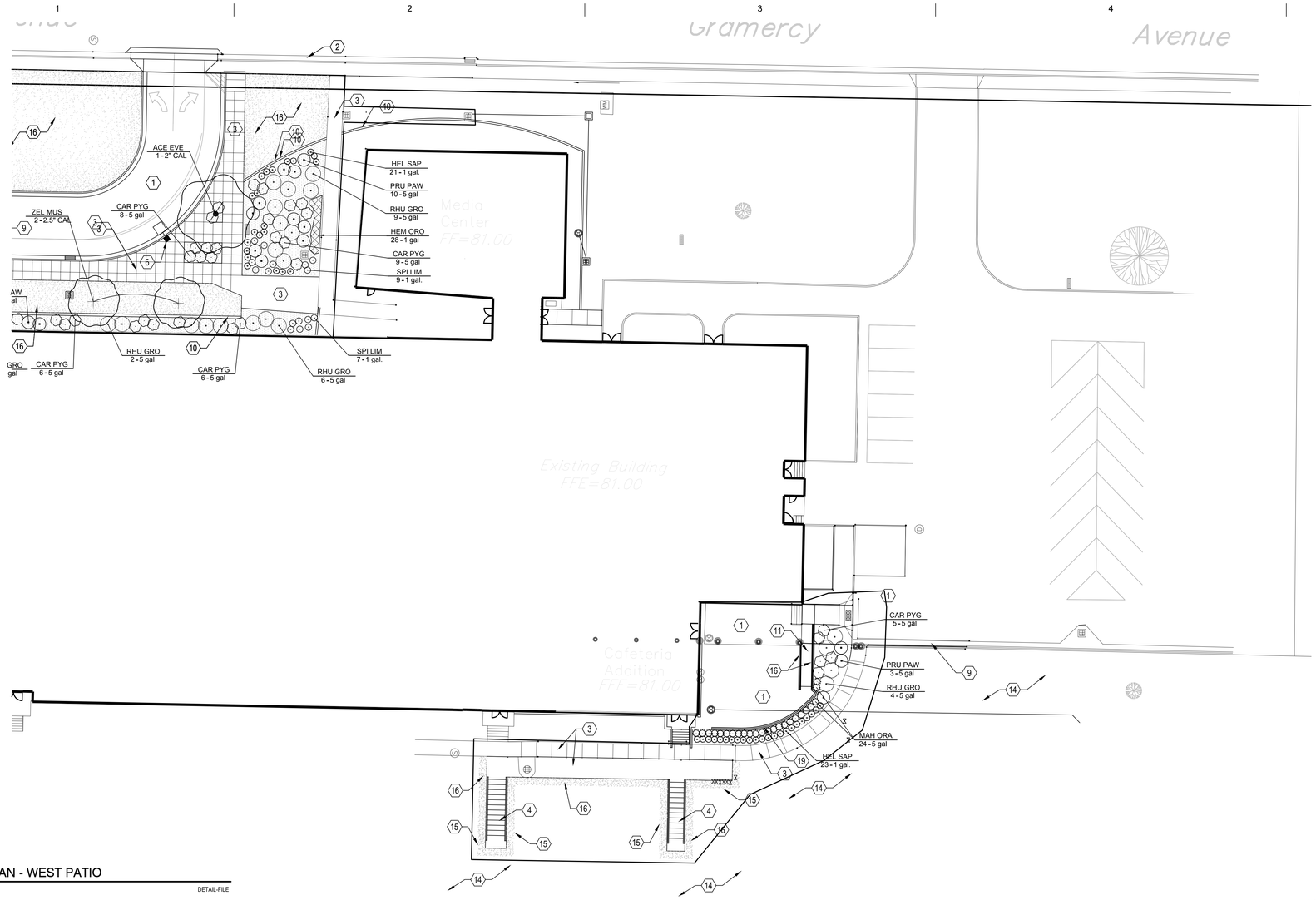

C1 PLANTING PLAN - WEST PATIO
1" = 20" DETAIL-FILE

PLANTING KEYNOTES

1. ASPHALT PAVING
2. CONCRETE CURB & GUTTER
3. CONCRETE PAVING
4. CONCRETE STAIRS
5. CATCH BASIN
6. LIGHT POLE
7. CONCRETE WALL
8. CANOPY BASE
9. CONCRETE CURB
10. CONCRETE MOWSTRIP
11. CONCRETE RAMP
12. FLAGPOLE
13. UTILITY MANHOLE
14. EXISTING LAWN
15. APPROX. EDGE OF EXISTING LAWN
16. LAWN (SOD)
17. LANDSCAPE AREA
18. PROJECT LIMIT LINE
19. SRW WALL

PLANTING NOTES

ALL PLANTS SHALL CONFORM TO THE MINIMUM STANDARDS OF HEIGHT, SIZE, CALIPER AND ETC. OF THE AMERICAN ASSOCIATIONS OF NURSERYMEN "AMERICAN STANDARDS FOR NURSERY STOCK".

THIS CONTRACTOR SHALL SPREAD TOPSOIL TO A DEPTH OF 6" IN ALL LAWN PLANTING AREAS AND 12" IN ALL SHRUB AND PERENNIAL BEDS.

THIS CONTRACTOR SHALL BE RESPONSIBLE FOR DISPOSING FROM THE SITE ALL SOIL EXCAVATED FROM TREE PITS.

ALL MOWSTRIPS ARE TO BE INSTALLED PRIOR TO THE INSTALLATION OF THE IRRIGATION SYSTEM SYSTEM AND THE LANDSCAPE PLANTING.

INSTALL SHREDDED BARK MULCH IN ALL SHRUB PLANTING BEDS AFTER PLANT MATERIAL INSTALLATION.

THIS CONTRACTOR SHALL BE RESPONSIBLE FOR PROVIDING AND INSTALLING TREE PIT DRAINAGE AS SHOWN.

THIS CONTRACTOR SHALL BE RESPONSIBLE FOR PROVIDING AND INSTALLING THE REQUIRED AMOUNT OF TOPSOIL TO COMPLETE THE PROJECT. NEW TOPSOIL SHALL MATCH QUALITY AND TEXTURE OF THE EXISTING TOPSOIL ON SITE.

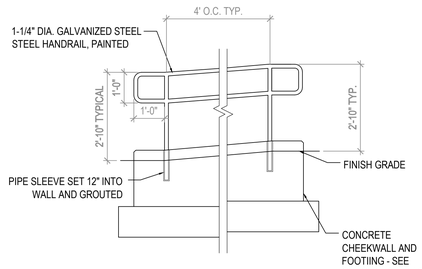

B3 HANDRAIL AT RAMP
1/2" = 1'-0" 055201-14

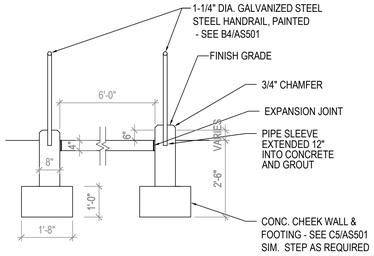

B4 CONCRETE RAMP
1/2" = 1'-0" RAMP-2007552-04

NOTE:
1. PROVIDE 1/4" RADIUS FINISH AT ALL EDGES (TYPICAL)
2. SCORE JOINT @ 15' O.C. MAX.
3. EXPANSION JOINT @ 30' O.C. MAX.

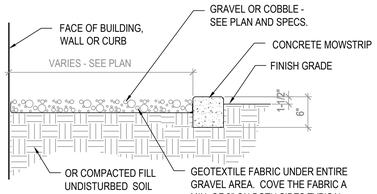

B5 GRAVEL MULCH
1" = 1'-0" 329413.23-04

TIE TREES TO 2"x2"x8' STAKES AT THE LOWEST POINT NECESSARY TO KEEP MAIN TRUNK UPRIGHT. PLACE STAKES AT EDGE OF ROOTBALL AND DRIVE A MIN. OF 12" INTO UNDISTURBED SOIL. TIE WITH #10 WIRE THRU 3/4" RUBBER HOSE (2 REQ'D)

PLANTING MIX SHALL BE WELL MIXED IN THE FOLLOWING RATIO: 4 PARTS APPROVED TOPSOIL, 1 PART SOIL-AID OR PEAT MOSS AND A SLOW RELEASE FERTILIZER AS PER MANUF. RECOMMENDATIONS.

ROUGHEN THE SIDES OF THE PIT IF REQUIRED FOR MOISTURE AND ROOT PENETRATION.

INSTALL TREE WRAP AND PROTECTION SLEEVE ON TRUNK AS PER MANUF.

CUT A 24" DIAMETER CIRCLE IN THE SOD AROUND THE TRUNK OF THE TREE FOR WATER BASIN.

PLANT TREE IN A SHALLOW PIT ON UNDISTURBED SOIL. PIT DIAMETER SHALL BE 4X THE BALL DIAMETER.

MULCH WATER BASIN 3" DEEP.

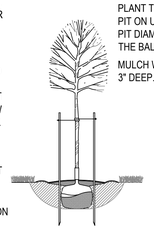

A1 TREE PLANTING DETAIL
1" = 1'-0" 329346.19-05

1. EXCAVATE ENTIRE PLANTING BED TO WIDTH AND DEPTH SHOWN. MINIMUM PLANTER BED IS 8' OR ROOT BALL DEPTH PLUS 4". PREPARE SOIL BY ADDING ORGANIC MATTER EQUAL TO 5% DRY WEIGHT OF SOIL. MINIMUM AREA OF PREPARED SOIL FOR SHRUBS IS 4 X ROOT BALL WIDTH.
2. ROUGHEN SIDES AND BOTTOM OF SHRUB PLANTING BED.
3. PLACE SHRUB IN PLANTING HOLE. SET TOP OF ROOT BALL FLUSH WITH FINISH GRADE.
4. FOR CONTAINER GROWN MATERIAL: REMOVE FROM CONTAINER, USE FINGERS OR SMALL TOOL TO GENTLY PULL THE ROOTS OUT OF THE OUTER LAYER OF POTTING SOIL. CUT OR PULL APART ANY ROOTS THAT CIRCLE THE PERIMETER OF THE CONTAINER.
5. FOR B&B MATERIAL: FOLD BURLAP FROM TOP OF ROOT BALL DOWN INTO GROUND ABOUT 1/4 TO 1/3 FROM TOP.
6. COMPACT SOIL UNDER AND AROUND ROOT BALL TO ELIMINATE AIR POCKETS.
7. INCORPORATE COMMERCIALLY PREPARED MYCORRHIZA SPORES WHEN SPECIFIED INTO THE SOIL IMMEDIATELY AROUND THE ROOT BALL.
8. APPLY COMPOST 3" DEEP AND TILL INTO TOP 6" OF PREPARED SOIL.
9. LAY DOWN WEED FABRIC
10. MULCH ENTIRE BED 3" DEEP. DO NOT PLACE MULCH AGAINST BASE OF PLANT.
11. THOROUGHLY SOAK THE ROOT BALL AND PREPARED SOIL TO MAINTAIN OPTIMUM SOIL MOISTURE UNTIL PLANTS ARE ESTABLISHED.

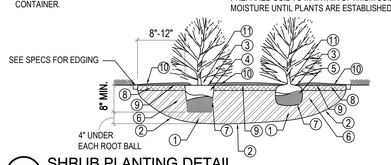

A2 SHRUB PLANTING DETAIL
1" = 1'-0" 329333-01

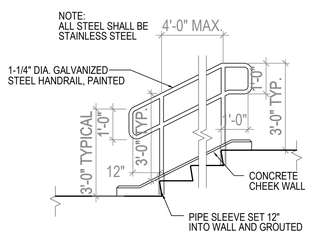

A3 HANDRAIL
1/2" = 1'-0" 055201-02

NOTE: PROVIDE 1/4" RADIUS FINISH AT ALL EDGES - TYPICAL.

NOTE: MOWSTRIP TO BE 12" WIDE WHEN ADJACENT TO BLDG.

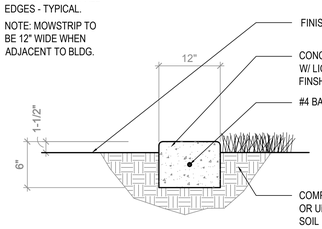

A4 12" CONCRETE MOWSTRIP
1 1/2" = 1'-0" 1" = 20" 329413.19-10

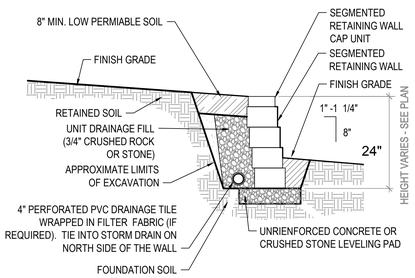

A5 UNREINFORCED SEGMENTED RETAINING WALL
1/2" = 1'-0" DETAIL-FILE 042233-02

MHTN ARCHITECTS
MHTN Architects, Inc.
420 East South Temple
Suite 100
Salt Lake City, Utah 84111
Telephone (801) 595-6700
Telefax (801) 595-6717
www.mhtn.com

OGDEN SCHOOL DISTRICT
Empowering Excellence Through Education

OGDEN SCHOOL DISTRICT
HIGHLAND AND JUNIOR HIGH SCHOOL REMODEL
325 GRAMERCY AVE.
OGDEN, UTAH 84404

©2011 MHTN ARCHITECTS, INC.
Drawings, written material, and design concepts shall not be used or reproduced in whole or part in any form or format without prior written consent of MHTN Architects, Inc. Do not scale drawings. Use given dimensions only. If not shown, verify correct dimensions with the Architect. Contractor shall check and verify all dimensions and conditions at job site.

SEAL
LICENSED LANDSCAPE ARCHITECT
RANDALL C. BOUDRERO
No. 0010555010
STATE OF UTAH

MHTN PROJECT NO. 2015505
DRAWN BY: Author CHECKED BY: Checker

ISSUED:

NO.	DATE	DESCRIPTION

CONTRACTOR TO VERIFY DRAWINGS IN FIELD USE REFLECT LAST REVISION DATE.

NO.	DATE	DESCRIPTION

SHEET NAME
LANDSCAPE PLAN

CONSTRUCTION DOCUMENTS
APRIL 15, 2015

SHEET NUMBER
LP1.02

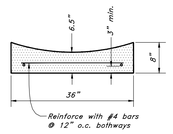

17 Typical Waterway Detail

Not to Scale

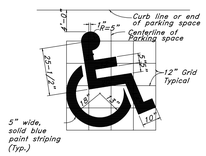

16 Handicap Symbol

Not to Scale

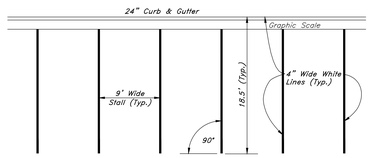

15 Typical Parking Lot Striping Plan

Not to Scale

NOTES:

1. BASE COURSE: PROVIDE MATERIAL AS PER APWA 32 11 23.
   1.1. PLACE MATERIAL PER APWA SECTION 32 05 10.
   1.2. COMPACT PER APWA SECTION 31 23 26 TO A DENSITY OF 95 PERCENT OR GREATER. MAXIMUM LIFT THICKNESS BEFORE COMPACTION IS 8" WHEN USING RIDING AND 6" WHEN USING HAND HELD COMPACTION EQUIPMENT.
2. CONCRETE SHALL BE CLASS 4000 AS PER APWA 03 30 04.
   2.1. PROVIDE 1/2" RADIUS ON CONCRETE EDGES EXPOSED TO VIEW.
3. EXPANSION JOINT SHALL BE VERTICAL, FULL DEPTH 1/2" WIDE. USE TYPE F1 JOINT FILLER AS PER APWA 32 13 73. SET TOP OF FILLER FLUSH WITH CONCRETE SURFACE.
4. CONTRACTION JOINTS SHALL BE VERTICAL.
   4.1. 1/8" WIDE AND 1" DEEP OR 1/4 SLAB THICKNESS IF SLAB IS OVER 4".
   4.1. MAXIMUM LENGTH TO WIDTH RATIO FOR NON-SQUARE PANELS IS 1.5 TO 1.
   4.2. MAXIMUM PANEL LENGTH (IN FEET) IS 2.5 TIMES THE SLAB THICKNESS (IN INCHES) TO A MAXIMUM OF 15'
5. REINFORCEMENT SHALL BE PER ASTM A 615, GRADE 60 GALVANIZED OR EPOXY COATED DEFORMED STEEL. SEE APWA SECTION 03 20 00 REQUIREMENTS.
6. BAG MIX: MARCH - NOVEMBER 6 1/2, DECEMBER - FEBRUARY 7 1/2.

	LOTS WITH 1-2 UNITS	LOTS WITH 3-4 UNITS	LOTS WITH OVER 5 UNITS
MINIMUM WIDTH	10'	16'	24'
MAXIMUM WIDTH	32'	32'	35'
	* OR 50% OF LOT FRONTAGE (WHICHEVER IS LESS)		
MINIMUM CONCRETE THICKNESS	6"	6"	6"
MINIMUM BASE	6"	6"	6"

	COMMERCIAL/MANUFACTURING (TRACTOR/TRAILER USE ONLY)	COMMERCIAL/MANUFACTURING (GENERAL USE)
MINIMUM WIDTH	35'	24'
MAXIMUM WIDTH	50'	35'
	*SEE SECTION 15-12-11 OF THE OGDEN CITY CODE FOR EXCEPTIONS	
MINIMUM CONCRETE THICKNESS	8"	8"
MINIMUM BASE	8*	8*

OGDEN CITY ENGINEERING - STANDARD DRAWINGS
DRIVEWAY APPROACH — RD-7
JUSTIN ANDERSON, CITY ENGINEER — SHEET 2 OF 2

14 Flared Driveway Approach - Notes Ogden City Standard

Not to Scale

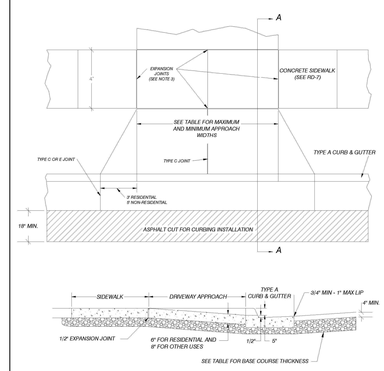

SIDEWALK, APPROACH, CURB AND GUTTER
SECTION A-A

OGDEN CITY ENGINEERING - STANDARD DRAWINGS
DRIVEWAY APPROACH — RD-7
JUSTIN ANDERSON, CITY ENGINEER — SHEET 1 OF 2

13 Flared Driveway Approach - Drawing Ogden City Standard

Not to Scale

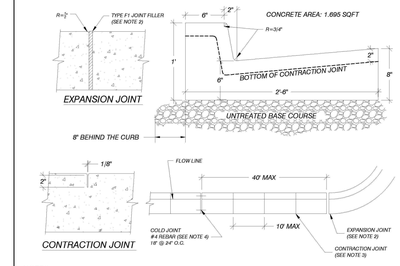

NOTES:

1. BASE COURSE SHALL BE PER APWA SECTION 32 11 23.
   1.1. EXTEND BASE 8" BEHIND THE CURB AND GUTTER.
   1.2. IF FLOW LINE IS GREATER THAN 0.5 PERCENT (S=0.005), PROVIDE 6" OF COMPACTED BASE COURSE. IF LESS, PROVIDE 8" OF COMPACTED BASE COURSE.
   1.3. COMPACT PER APWA SECTION 31 23 26 TO A DENSITY OF 95 PERCENT OR GREATER. MAXIMUM LIFT THICKNESS BEFORE COMPACTION IS 8" WHEN USING RIDING AND 6" WHEN USING HAND COMPACTION EQUIPMENT.
2. MAKE EXPANSION JOINTS VERTICAL, FULL DEPTH, 1/2" WIDE WITH TYPE F1 JOINT FILLER MATERIAL PER APWA SECTION 32 13 73.
   2.1. SET TOP OF FILLER FLUSH WITH THE CONCRETE.
   2.2. EXPANSION JOINTS ARE REQUIRED AT THE START OR END OF A STREET INTERSECTION CURB RETURN.
3. MAKE CONTRACTION JOINTS VERTICAL.
   3.1. 1/8" WIDE AND 2" DEEP OR 1/4 OF THE SLAB THICKNESS IF THE SLAB IS OVER 8" THICK.
4. USE REINFORCEMENT PER ASTM A 615, GRADE 60, GALVANIZED OR EPOXY COATED DEFORMED STEEL. SEE APWA SECTION 03 20 00 REQUIREMENTS.
5. BAG MIX: MARCH - NOVEMBER 6 1/2, DECEMBER - FEBRUARY 7 1/2.

OGDEN CITY ENGINEERING - STANDARD DRAWINGS
TYPE A CURB & GUTTER — RD-4
JUSTIN ANDERSON, CITY ENGINEER — SHEET 1 OF 1

12 Typical Section - 30" Curb and Gutter Ogden City Standard

Not to Scale

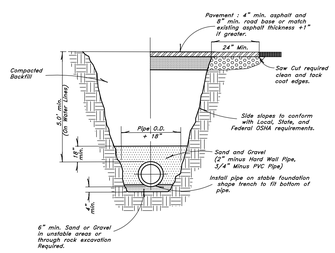

11 Typical Trench Detail

Not to Scale

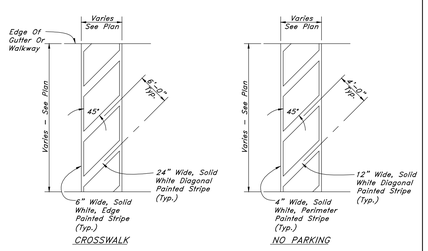

10 Striping

Not to Scale

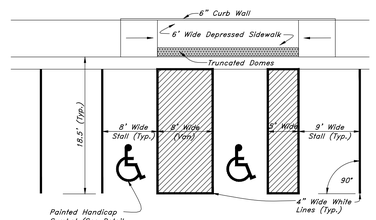

9 Typical ADA Parking Striping Plan

Not to Scale

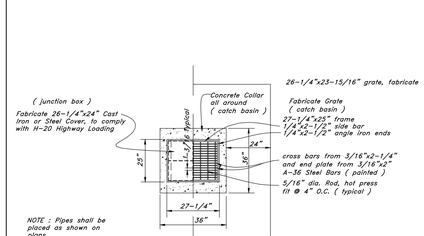

7 Catch Basin/Junction Box

Not to Scale

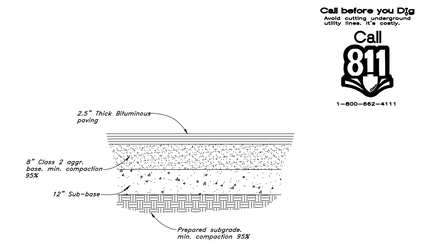

8 Typical Bituminous Pavement Section Light Traffic Areas

Not to Scale

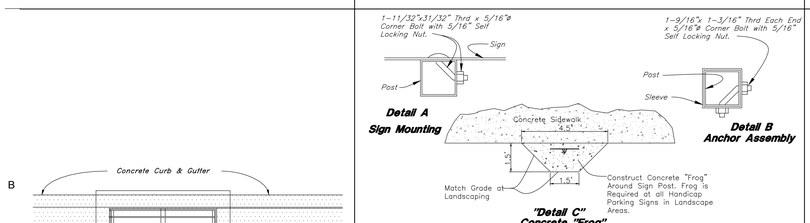

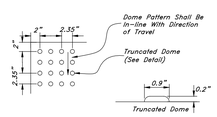

All Sidewalk Curb Ramps Shall Have Detectable Warning Surfaces That Extend The Full Width Of Curb Ramp and 2" Deep. Ramp shall be different color, 20% minimum different shade, than rest of sidewalk. Use Cast Iron for Truncated Domes.

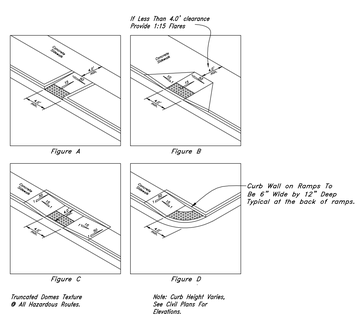

Truncated Domes Texture @ All Hazardous Routes.

Note: Curb Height Varies, See Civil Plans For Elevations.

3 Typical ADA Ramp Detail

Not to Scale

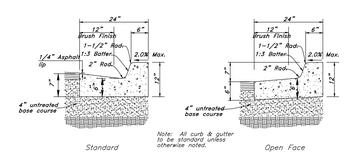

2 Typical Section - 24" Curb & Gutter

Not to Scale

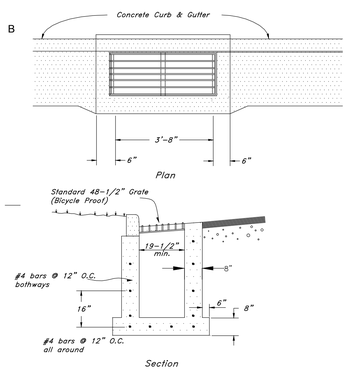

5 Typical Inlet Box

in curb & gutter
Not to Scale

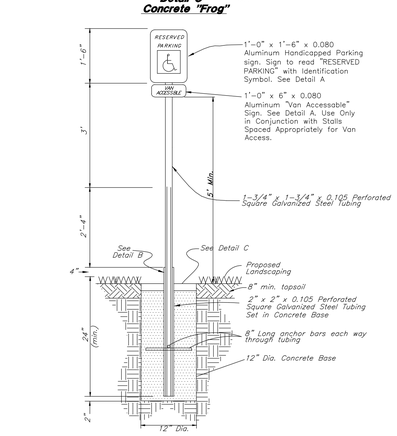

4 Handicapped Parking Sign

Not to Scale

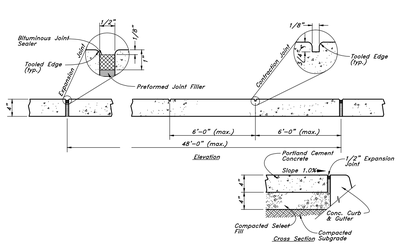

6 Typical Bituminous Pavement Section Heavy Duty Drives

Not to Scale

1 Concrete Sidewalk

Not to Scale

MHTN ARCHITECTS
MHTN Architects, Inc.
420 East South Temple
Suite 100
Salt Lake City, Utah 84111
Telephone (801) 595-6700
Telefax (801) 595-6717
www.mhtn.com

OGDEN SCHOOL DISTRICT
Empowering Excellence Through Education

OGDEN SCHOOL DISTRICT
HIGHLAND JUNIOR HIGH SCHOOL REMODEL
325 GRAMERCY AVE.
OGDEN, UTAH 84404

©2011 MHTN ARCHITECTS, INC.
Drawings, written material, and design concepts shall not be used or reproduced in whole or part in any form or format without prior written consent of MHTN Architects, Inc. Do not scale drawings. Use only given or non-dimensionally fit or not shown, verify correct dimensions with the Architect. Contractor shall check and verify all dimensions and conditions at job site.

SEAL

MHTN PROJECT NO. 2015505

DRAWN BY: Author CHECKED BY: Checker

ISSUED:

NO.	DATE	DESCRIPTION

CONTRACTOR TO VERIFY DRAWINGS IN FIELD USE REFLECT LAST REVISION DATE:

NO.	DATE	DESCRIPTION

SHEET NAME
CONSTRUCTION DETAILS

CONSTRUCTION DOCUMENTS
APRIL 15, 2015

SHEET NUMBER
CD501

STRUCTURAL NOTES

A. GENERAL

1. THE STRUCTURAL NOTES ARE INTENDED TO COMPLEMENT THE PROJECT SPECIFICATIONS WHICH ARE PART OF THE CONSTRUCTION DOCUMENTS. SPECIFIC NOTES AND DETAILS ON THE DRAWINGS SHALL GOVERN OVER THE STRUCTURAL NOTES AND TYPICAL DETAILS.
2. THESE DRAWINGS (AND, WHERE APPLICABLE, ACCOMPANYING WRITTEN SPECIFICATIONS) ARE THE ONLY CONTRACT DOCUMENTS PROVIDED BY ARW ENGINEERS FOR THE PROJECT REPRESENTED HEREIN. NOTHING IN ANY DIGITAL MODEL OR DIGITAL FILE RELATED TO THIS PROJECT SHALL BE TAKEN TO SUPERSEDE ANY INFORMATION SHOWN IN THESE DRAWINGS (INCLUDING, BUT NOT LIMITED TO, DIMENSIONS, SIZES, ETC).
3. THE ARCHITECTURAL DRAWINGS ARE THE PRIME CONTRACT DRAWINGS. THE STRUCTURAL DRAWINGS ARE SUPPLEMENTARY TO AND MUST BE USED IN CONJUNCTION WITH THE ARCHITECTURAL DRAWINGS AND OTHER CONSULTANTS DRAWINGS. ALL OMISSIONS OR CONFLICTS BETWEEN THE VARIOUS ELEMENTS OF THE WORKING DRAWINGS AND/OR SPECIFICATIONS SHALL BE BROUGHT TO THE ATTENTION OF THE ARCHITECT AND STRUCTURAL ENGINEER BEFORE PROCEEDING WITH ANY WORK INVOLVED. IN CASE OF CONFLICT, FOLLOW THE MOST STRINGENT REQUIREMENT AS DIRECTED BY THE ARCHITECT AT NO ADDITIONAL COST TO THE OWNER.
4. SEE SPECIFICATIONS FOR REQUIRED SUBMITTALS. SUBMITTALS SHALL BE MADE IN A TIMELY MANNER AS INDICATED IN SPECIFICATIONS. REVIEW OF SUBMITTALS BY ARW ENGINEERS IS FOR GENERAL COMPLIANCE ONLY AND IS NOT INTENDED AS APPROVAL. CONTRACTOR IS RESPONSIBLE FOR VERIFYING ALL SIZES, DIMENSIONS, AND ELEVATIONS ON SUBMITTALS AS RELATED TO DESIGN DOCUMENTS. PREPARATION OF SHOP DRAWINGS FOR STRUCTURAL ELEMENTS WILL REQUIRE INFORMATION (I.E. DIMENSIONS, ETC.) FOUND IN THE ARCHITECTURAL, STRUCTURAL, AND OTHER CONSULTANTS DRAWINGS.
5. THE CONTRACTOR SHALL VERIFY ALL CONDITIONS AND DIMENSIONS AT THE SITE. IF ACTUAL CONDITIONS DIFFER FROM THOSE SHOWN ON CONTRACT DOCUMENTS, CONTRACTOR SHALL NOTIFY ARCHITECT PRIOR TO FABRICATION OR CONSTRUCTION OF ANY AFFECTED ELEMENTS.
6. THE CONTRACTOR SHALL COORDINATE AND VERIFY ALL LOCATIONS AND SIZES OF MECHANICAL EQUIPMENT OR OTHER EQUIPMENT BEFORE FABRICATING AND ERECTING STRUCTURAL ELEMENTS. SIZES AND LOCATIONS THAT DIFFER FROM THOSE SHOWN ON THE CONTRACT DOCUMENTS SHALL BE REPORTED TO THE ARCHITECT.
7. THE CONTRACTOR SHALL SUBMIT A WRITTEN REQUEST TO THE ARCHITECT FOR ARCHITECT AND/OR ENGINEER APPROVAL BEFORE PROCEEDING WITH ANY CHANGES, MODIFICATIONS, OR SUBSTITUTIONS.
8. OBSERVATION VISITS TO THE SITE BY ARW ENGINEERS FIELD REPRESENTATIVES SHALL NEITHER BE CONSTRUED AS INSPECTION NOR APPROVAL OF CONSTRUCTION.
9. DURING AND AFTER CONSTRUCTION, BUILDER AND/OR OWNER SHALL KEEP LOADS ON STRUCTURE WITHIN THE LIMITS OF DESIGN LOADS AS NOTED IN THESE DOCUMENTS.
10. TYPICAL OR SIMILAR DETAILS AND SECTIONS SHALL APPLY WHERE SPECIFIC DETAILS ARE NOT SHOWN. TYPICAL OR SIMILAR DETAILS REFER TO THE CONDITION ADDRESSED AND ARE NOT NECESSARILY DETAILS LABELED "TYPICAL" OR "SIMILAR" IN THE PLANS AND DOCUMENTS.
11. DRAWINGS AND DETAILS HAVE BEEN PREPARED WITH THE INTENT TO VISUALLY REPRESENT INFORMATION PROVIDED IN SCALED FORM; HOWEVER CONTRACTOR/SUPPLIERS SHOULD NOT SCALE PLANS OR DETAILS FOR DIMENSIONAL INFORMATION.
12. THE CONTRACTOR SHALL PROVIDE ADEQUATE TEMPORARY SHORING AND BRACING FOR ALL STRUCTURAL ELEMENTS UNTIL THE ENTIRE STRUCTURAL SYSTEM IS COMPLETED. DESIGN OF ALL SHORING AND BRACING IS BY OTHERS AT NO ADDITIONAL COST TO THE OWNER.
13. ENGINEER SHALL NOT BE RESPONSIBLE FOR ACTIVITIES UNDER CONTROL OF THE CONTRACTOR SUCH AS CONSTRUCTION SITE SAFETY, MEANS, METHODS AND SEQUENCING OF CONSTRUCTION. ENGINEER SHALL NOT BE RESPONSIBLE FOR FABRICATION, ERECTION AND CONSTRUCTION REQUIREMENTS AS PRESCRIBED BY OSHA OR OTHER REGULATORY AGENCIES REGARDLESS OF INDICATIONS IN THESE DOCUMENTS.
14. NOTICE OF COPYRIGHT: THESE STRUCTURAL DRAWINGS ARE HEREBY COPYRIGHTED BY ARW ENGINEERS, ALL RIGHTS RESERVED. THESE DOCUMENTS DEFINE A STRUCTURE AND ARE INSTRUMENTS OF SERVICE, FOR ONE USE ONLY. REPRODUCTION AND DISTRIBUTION OF THESE DRAWINGS IS ONLY ALLOWED AS REQUIRED FOR REGULATORY AGENCIES AND FOR CONVEYANCE OF INFORMATION TO PARTIES INVOLVED IN THE CONSTRUCTION OF THIS PROJECT. THESE DOCUMENTS SHALL NOT BE REPRODUCED OR COPIED, IN PART OR WHOLE BY ANY PARTY FOR USE IN PREPARATION OF SHOP DRAWINGS OR OTHER SUBMITTALS.

B. STATEMENT OF SPECIAL INSPECTIONS AND SPECIAL INSPECTIONS

1. THE DESIGNATED SEISMIC/WIND SYSTEMS AND SEISMIC/WIND-FORCE-RESISTING SYSTEMS THAT ARE SUBJECT TO SPECIAL INSPECTIONS IN ACCORDANCE WITH IBC SECTION 1705.10 AND 1705.11 ARE IDENTIFIED ON THESE DOCUMENTS WITH A CIRCLE "L". ALL OTHER ITEMS REQUIRING SPECIAL INSPECTION ARE IDENTIFIED IN THE SPECIAL INSPECTION SCHEDULE ON SHEET S002 AND S003.
2. SPECIAL INSPECTIONS AND TESTING ARE TO BE PROVIDED AS REQUIRED BY IBC SECTIONS 1704 THROUGH 1705 AND OTHER APPLICABLE SECTIONS OF THE IBC. THE TYPE AND FREQUENCY OF TESTING AND SPECIAL INSPECTIONS SHALL BE AS NOTED IN THE SPECIAL INSPECTION SCHEDULE, JOB SPECIFICATIONS, AND ACCORDANCE WITH IBC SECTION 110 AND CHAPTER 17. CONTRACTOR SHALL COORDINATE AND COOPERATE WITH REQUIRED INSPECTIONS.
3. ALL TESTING AND SPECIAL INSPECTION SHALL BE PROVIDED BY A QUALIFIED INDEPENDENT SPECIAL INSPECTION AGENCY IN ACCORDANCE WITH IBC 1704 AND AS OUTLINED IN THE JOB SPECIFICATIONS. REPORTS OF FINDINGS OR DISCREPANCIES SHALL BE NOTED AND FORWARDED TO THE CONTRACTOR, ARCHITECT, ENGINEERS, AND BUILDING OFFICIAL IN A TIMELY MANNER.
4. STRUCTURAL OBSERVATION VISITS SHALL BE PERFORMED BY A REPRESENTATIVE FROM ARW ENGINEERS IN ACCORDANCE WITH THE CONTRACT AS NEEDED TO OBSERVE THE CONSTRUCTION OF CRITICAL BUILDING ELEMENTS (I.E. FOOTINGS, BRACED FRAMES, MOMENT FRAMES, DRAG STRUTS AND THEIR CONNECTIONS, COLLECTORS, AND ROOF AND FLOOR DIAPHRAGMS). STRUCTURAL OBSERVATION REPORTS FOR EACH VISIT SHALL BE SENT DIRECTLY TO THE ARCHITECT FOR DISTRIBUTION TO THE CONTRACTOR AND BUILDING OFFICIAL. STRUCTURAL OBSERVATION VISITS SHALL NEITHER BE CONSTRUED AS SPECIAL INSPECTION NOR APPROVAL OF COMPLETED CONSTRUCTION.
5. IN ACCORDANCE WITH IBC 1704.4, THE CONTRACTOR SHALL SUBMIT A WRITTEN CONTRACTOR'S STATEMENT OF RESPONSIBILITY TO THE BUILDING OFFICIAL AND OWNER. THE STATEMENT SHALL BE SUBMITTED PRIOR TO THE CONSTRUCTION OF ANY SEISMIC/WIND-FORCE-RESISTING SYSTEM, DESIGNATED SEISMIC/WIND SYSTEM, OR COMPONENT IDENTIFIED IN THESE DOCUMENTS WITH A CIRCLE "L".

C. BASIS OF DESIGN

1. GOVERNING BUILDING CODE: INTERNATIONAL BUILDING CODE (IBC) 2012
   RISK CATEGORY: III
2. ROOF LOADS
   a. FLAT-ROOF SNOW LOAD, PF: 39.8 PSF
      1) GROUND SNOW LOAD, PG: 43 PSF
      2) SNOW EXPOSURE FACTOR, CE: 1.0
      3) SNOW LOAD IMPORTANCE FACTOR, IS: 1.1
      4) THERMAL FACTOR, CT: 1.2
   b. DEAD LOAD = 15 PSF
3. WIND DESIGN
   a. BASIC WIND SPEED (3 SECOND GUST): 120 MPH
   b. WIND EXPOSURE: C
   c. COMPONENT AND CLADDING DESIGN WIND PRESSURE SHALL BE AS REQUIRED PER ASCE 7-10.
4. SEISMIC DESIGN:
   a. SEISMIC IMPORTANCE FACTOR, IE: 1.25
   b. SITE CLASS: D
   c. MAPPED SPECTRAL RESPONSE ACCELERATIONS: SS = 1.381 , S1 = 0.514
   d. SPECTRAL RESPONSE COEFFICIENTS: SDS = 0.920 , SD1 = 0.514
   e. SEISMIC DESIGN CATEGORY: D
   f. BASIC SEISMIC-FORCE-RESISTING SYSTEM: STEEL ORDINARY CANTILEVER COLUMN
   g. SEISMIC RESPONSE COEFFICIENT, CS: 0.920
   h. RESPONSE MODIFICATION FACTOR, R: 1.25

D. FOUNDATION

1. DESIGN SOIL PRESSURE: 1500 PSF
2. TOP OF FOOTING ELEVATIONS SHOWN ON THE FOOTING AND FOUNDATION PLAN ARE BASED ON PRELIMINARY GRADING INFORMATION AND MUST BE VERIFIED PRIOR TO CONSTRUCTION. STEPS WHERE SHOWN ARE AT APPROXIMATE LOCATIONS. ALL EXTERIOR FOOTINGS MUST BEAR A MINIMUM OF 36 INCHES BELOW LOWEST ADJACENT FINAL GRADE.
3. ALL WALLS (EXCEPT CANTILEVERED RETAINING WALLS) SHALL BE ADEQUATELY BRACED AGAINST LATERAL MOVEMENT PRIOR TO BACKFILLING. DESIGN AND ERECTION OF BRACING/SHORING IS THE RESPONSIBILITY OF THE GENERAL CONTRACTOR. BRACING SHALL REMAIN IN PLACE UNTIL SUPPORTING STRUCTURAL ELEMENTS ARE IN PLACE AND HAVE ATTAINED FULL STRENGTH.
4. UNLESS NOTED OTHERWISE, ALL FOOTINGS AT COLUMNS TO BE CENTERED BELOW COLUMNS.
5. UNLESS NOTED OTHERWISE, ALL FOOTINGS SHALL HAVE VERTICAL FACES FORMED WITH STANDARD FORMING MATERIALS (WOOD, METAL, ETC.). WITH PRIOR APPROVAL OF ARCHITECT AND ENGINEER, CONCRETE FOR FOOTINGS CAN BE PLACED IN EXCAVATED "SOIL" FORMS PROVIDED THAT THE DIMENSIONS ARE INCREASED 3" ON EACH SIDE.
6. ALL FOOTINGS SHALL BE PLACED ON MECHANICALLY COMPACTED FILL COMPACTED TO NOT LESS THAN 95% OF MODIFIED PROCTOR DENSITY (ASTM D-1557).
7. UNLESS NOTED OTHERWISE, ALL CONCRETE SLABS ON EARTH SHALL BEAR ON STRUCTURAL FILL COMPACTED TO 90% OF MODIFIED PROCTOR DENSITY (ASTM D-1557).

E. CONCRETE

1. ALL CONCRETE MIX DESIGNS SHALL COMPLY WITH THE REQUIREMENTS LISTED BELOW:
   a. FOOTINGS, GRADE BEAMS, FOUNDATION WALLS:
      1) WHERE THE TOP OF THE ELEMENT IS EXPOSED OR LOCATED WITHIN 36" OF THE LOWEST ADJACENT GRADE (EXPOSURE CATEGORY F1):
         a) 28 DAY COMPRESSIVE STRENGTH:4500 PSI
         b) MAXIMUM W/C RATIO: 0.45
         c) MAXIMUM AGGREGATE SIZE: 1"
         d) AIR CONTENT: 6%
      2) WHERE THE TOP OF THE ELEMENT IS NOT EXPOSED OR LOCATED WITHIN 36" OF THE LOWEST ADJACENT GRADE (EXPOSURE CATEGORY F0):
         a) 28 DAY COMPRESSIVE STRENGTH:3000 PSI
   b. INTERIOR SLABS ON GRADE (EXPOSURE CATEGORY F0):
      1) 28 DAY COMPRESSIVE STRENGTH: 3000 PSI
   c. EXTERIOR SLABS (DOCKS, ETC.) (EXPOSURE CATEGORY F1):
      1) 28 DAY COMPRESSIVE STRENGTH: 4500 PSI
      2) MAXIMUM W/C RATIO: 0.45
      3) MAXIMUM AGGREGATE SIZE: 1"
      4) MINIMUM AIR CONTENT: 6%
2. WATER USED IN MIXING CONCRETE SHALL CONFORM TO ASTM C1602.
3. NO PIPES, DUCTS, SLEEVES, ETC. SHALL BE PLACED IN STRUCTURAL CONCRETE UNLESS SPECIFICALLY DETAILED OR APPROVED BY THE STRUCTURAL ENGINEER. NO ALUMINUM PRODUCTS SHALL BE EMBEDDED IN CONCRETE. PENETRATIONS THRU STRUCTURAL CONCRETE ELEMENTS MUST BE APPROVED BY THE ENGINEER AND SHALL BE BUILT INTO THE ELEMENT PRIOR TO CONCRETE PLACEMENT.
4. REFER TO ARCHITECTURAL DRAWINGS FOR MOLDS, GROOVES, ORNAMENTS, ETC. TO BE CAST IN TO CONCRETE, AND FOR EXTENT AND LOCATION OF DEPRESSIONS, CURBS, RAMPS, ETC.
5. UNLESS NOTED OTHERWISE, MINIMUM REINFORCING IN ALL CONCRETE FOUNDATION WALLS SHALL BE AS FOLLOWS:

THICKNESS	TOP & BOTTOM BARS	VERTICAL	HORIZONTAL
8"	(2) #5	#4 AT 18"O.C.	#4 AT 12"O.C.

6. UNLESS NOTED OTHERWISE, CONCRETE SLABS ON EARTH SHALL BE REINFORCED AS FOLLOWS:
   4" THICK - #3 AT 18"O.C. EACH WAY
   6" THICK - #4 AT 18"O.C. EACH WAY
   REINFORCING SHALL BE CONTINUOUSLY SUPPORTED AT 36"O.C. MAXIMUM SPACING.
7. UNLESS NOTED OTHERWISE, FOR OPENINGS LARGER THAN 12" IN ANY DIRECTION IN CONCRETE WALLS ADD (2) #5 BARS ALL SIDES IN ADDITION TO REGULAR WALL REINFORCING AND EXTEND 24" EACH WAY BEYOND OPENING. WHERE 24" IS NOT AVAILABLE, EXTEND BARS AS FAR AS POSSIBLE AND TERMINATE WITH A STANDARD HOOK.
8. CONSTRUCTION JOINTS NOT SHOWN ON THE PLANS SHALL BE MADE AND LOCATED SO AS TO NOT IMPAIR THE STRENGTH OF THE STRUCTURE AND AS APPROVED BY THE STRUCTURAL ENGINEER. PROVIDE 2 X 4 (SHAPED) KEYWAY IN ALL VERTICAL AND HORIZONTAL JOINTS UNLESS NOTED OR DETAILED OTHERWISE. ALL STEEL REINFORCING SHALL BE CONTINUOUS THROUGH COLD JOINTS UNLESS NOTED OTHERWISE. SEE TYPICAL DETAILS FOR COLD/CONSTRUCTION JOINTS FOR SLABS ON GRADE.

F. ANCHOR BOLTS/EMBEDDED BOLTS

1. ALL ANCHOR BOLTS SHALL HAVE ASTM A-563 HEAVY HEX NUT AND ASTM F-436 WASHERS AT STANDARD OR OVERSIZED HOLES PER AISC SPECIFICATION TABLE J3.3. WHERE HOLE SIZES DO NOT COMPLY WITH THE LIMITATIONS FOR OVERSIZED HOLES THE STRUCTURAL ENGINEER SHALL BE NOTIFIED TO DETERMINE STEEL PLATE WASHER REQUIREMENTS. ANCHOR BOLTS SHALL COMPLY WITH THE FOLLOWING:
   a. AT ALL OTHER ANCHOR BOLTS (UNLESS NOTED OTHERWISE) - ASTM F1554 GRADE 36 HEADED BOLTS. (ASTM A36 THREADED ROD MAY BE USED WITH DOUBLE NUT AND WASHER.)
2. EMBEDDED BOLTS IN MASONRY SHALL BE (UNLESS NOTED OTHERWISE) ASTM A-307 GRADE HEADED BOLTS.
3. SEE TYPICAL ANCHOR BOLT DETAIL FOR DEFINITIONS OF EMBEDMENT LENGTH, ETC.
4. FURNISH TEMPLATES AND OTHER DEVICES AS NECESSARY FOR PRESETTING ALL BOLTS PRIOR TO PLACING CONCRETE AND/OR GROUT.
5. IF THREADED RODS ARE USED AS PERMITTED ABOVE, THEY SHALL BE CLEAR OF SOIL AND DIRT.
6. WHERE REQUIRED FOR ERECTION, HOLES LARGER THAN OVERSIZED MAY BE PERMITTED WITH THE USE OF STEEL PLATE WASHERS AT THE DISCRETION OF THE STRUCTURAL ENGINEER.

G. ADHESIVE/MECHANICAL ANCHORS

1. ALL ADHESIVE/MECHANICAL ANCHORS SHALL BE INSTALLED IN ACCORDANCE WITH AN APPROVED INDEPENDENT EVALUATION REPORT (ICC, IAPMO, OR APPROVED EQUAL), AS INDICATED BELOW, AND IN ACCORDANCE WITH ALL MANUFACTURER'S REQUIREMENTS.
2. ADHESIVE ANCHORS SHALL BE INSTALLED IN CONCRETE HAVING A MINIMUM AGE OF 21 DAYS AT TIME OF ANCHOR INSTALLATION.
3. UNLESS NOTED OTHERWISE, ALL ADHESIVE ANCHORS INTO CONCRETE SHALL BE:
   a. HILTI HIT-RE 500-SD (ESR-2322), OR HILTI HIT-HY 200 (ESR-3187).
   b. SIMPSON SET XP EPOXY (ESR-2508).
4. UNLESS NOTED OTHERWISE, ALL ADHESIVE ANCHORS INTO MASONRY SHALL BE:
   a. HILTI HIT HY-150 MAX (ESR-1967), OR HILTI HIT-HY-70 (ESR-2682).
   b. SIMPSON SET ADHESIVE (IAPMO ER-0265).
5. ALL MASONRY CELLS WITHIN 8" OF THE ANCHOR SHALL BE SOLID GROUTED.
6. THE TESTING LABORATORY WILL PERFORM VISUAL INSPECTION OF ANCHORS AND DOWELS AS SPECIFIED IN THE SPECIAL INSPECTION SCHEDULE AND THE APPROVED INDEPENDENT EVALUATION REPORT. TENSION TESTING CAN BE REQUIRED AT THE DIRECTION OF THE STRUCTURAL ENGINEER OF RECORD OR THE SPECIAL INSPECTOR.
7. IF REINFORCEMENT IS ENCOUNTERED DURING DRILLING, ABANDON THAT HOLE AND SHIFT THE ANCHOR LOCATION TO AVOID THE REINFORCEMENT. PROVIDE A MINIMUM SPACE OF (2) ANCHOR HOLE DIAMETERS OR 1 INCH, WHICH EVER IS LARGER, OF SOUND CONCRETE/MASONRY BETWEEN THE ANCHOR AND THE ABANDONED HOLE. FILL THE ABANDONED HOLE WITH NON-SHRINK GROUT. AT CONTRACTORS OPTION, LOCATE EXISTING REINFORCEMENT PRIOR TO DRILLING/CORING. IF THE ANCHOR OR DOWEL CANNOT BE SHIFTED AS NOTED ABOVE, THE ENGINEER WILL DETERMINE A NEW LOCATION.
8. LOCATE REINFORCEMENT AND CONFIRM FINAL ANCHOR LOCATIONS PRIOR TO FABRICATING PLATES, MEMBERS, OR OTHER STEEL ASSEMBLIES ATTACHED WITH MECHANICAL ANCHORS

H. REINFORCING STEEL

1. REINFORCING BAR STRENGTH REQUIREMENTS:
   a. ALL REINFORCING BARS SHALL CONFORM TO ASTM STANDARD A-615 GRADE 60 AND ALL WELDED WIRE FABRIC SHALL CONFORM TO ASTM STANDARD A-185 AND SHALL BE SUPPLIED IN FLAT SHEETS. ADEQUATELY TIE AND SUPPORT ALL REINFORCING STEEL AS SPECIFIED BY ACI 117, TO MAINTAIN EXACT REQUIRED POSITION.
2. HEADED SHEAR STUD ASSEMBLIES SHALL CONFORM TO ASTM A1044.
3. STEEL DISCONTINUOUS FIBER REINFORCEMENT SHALL BE DEFORMED AND CONFORM TO ASTM A820 AND SHALL HAVE A LENGTH TO DIAMETER RATIO NOT SMALLER THAN 50 AND NOT GREATER THAN 100.
4. HEADED DEFORMED BARS SHALL CONFORM TO ASTM A970. OBSTRUCTIONS OR INTERRUPTIONS OF THE BAR DEFORMATIONS, IF ANY, SHALL NOT EXTEND MORE THAN 2 BAR DIAMETERS FROM THE BEARING FACE OF THE HEAD.
5. ALL FIELD BENT DOWELS SHALL BE GRADE 40 WITH SPACING INDICATED REDUCED BY 1/3.
6. UNLESS NOTED OTHERWISE, REINFORCEMENT SHALL HAVE THE FOLLOWING CONCRETE COVERAGE:
   a. CAST AGAINST AND PERMANENTLY EXPOSED TO EARTH ….. 3"
   b. EXPOSED TO EARTH OR WEATHER:
      1) #6 & LARGER ….. 2"
      2) #5 & SMALLER …..1-1/2"
   c. NOT EXPOSED TO WEATHER OR EARTH:
      1) SLABS, WALLS, JOISTS, #11 & SMALLER ….. 3/4"
      2) BEAMS, COLUMNS: MAIN REINFORCING OR TIES ….. 1-1/2"
   d. SLAB ON GRADE:
      1) PLACE REINFORCING AT CENTER OF SLAB UNLESS INDICATED OTHERWISE.
7. EXCEPT WHERE NOTED ON PLANS OR DETAILS CONTINUOUS REINFORCEMENT SHALL BE SPLICED AT POINTS OF MINIMUM STRESS BY LAPPING PER THE REBAR LAP SCHEDULE.
8. REINFORCING STEEL MAY BE SPLICED WITH MECHANICAL COUPLERS THAT HAVE A TENSION CAPACITY OF AT LEAST 125% OF THE STRENGTH OF THE BAR. MECHANICAL COUPLERS SHALL BE A POSITIVE CONNECTING TYPE COUPLER, AND SHALL BE INSTALLED IN ACCORDANCE WITH AN APPROVED ICC RESEARCH REPORT. WHERE THESE ARE USED, SPLICES ON ADJACENT BARS SHALL BE STAGGERED AT LEAST 24 INCHES ALONG THE LENGTH OF THE BARS.
9. ALL VERTICAL REINFORCING IN STRUCTURAL ELEMENTS ABOVE SHALL BE SPLICED WITH MATCHING DOWELS EMBEDDED WITHIN THE FOOTINGS OR STRUCTURE BELOW. SPLICE LENGTHS SHALL COMPLY WITH REBAR LAP SCHEDULE. DOWELS INTO FOOTINGS SHALL TERMINATE WITH A STANDARD HOOK, AND SHALL EXTEND TO WITHIN 4" OF THE BOTTOM OF THE FOOTING, BUT NEED NOT EXTEND MORE THAN 20" INTO FOOTING. FOR MASONRY CONSTRUCTION SEE STRUCTURAL NOTE J.6.A.
10. DO NOT WELD REINFORCING EXCEPT AS NOTED ON PLANS, WHERE REINFORCING IS WELDED, USE ASTM A-706 REINFORCING.
11. REINFORCING BARS, TIES, AND TENDONS SHALL BE SUPPORTED BY NYLON CONES, PLASTIC-COATED TIE-WIRES, OR PLASTIC-COATED CHAIRS. REINFORCING IN FOOTINGS IS PERMITTED TO BE SUPPORTED ON CONCRETE DOBIES.
12. UNLESS NOTED OTHERWISE, HOOKS, STIRRUPS, TIES, AND OTHER BENDS IN REINFORCING STEEL SHALL MEET THE STANDARDS SET FORTH IN ACI 318/318R-11. UNLESS OTHERWISE PERMITTED BY THE ENGINEER, ALL REINFORCEMENT SHALL BE BENT COLD. REINFORCEMENT PARTIALLY EMBEDDED IN CONCRETE SHALL NOT BE FIELD BENT, EXCEPT AS SHOWN ON THESE DRAWINGS OR OTHERWISE PERMITTED BY THE ENGINEER.
13. UNLESS SPECIFICALLY NOTED AND/OR DETAILED IN THE STRUCTURAL DRAWINGS CONDUIT SHALL NOT BE IN CONTACT WITH REINFORCING STEEL.

I. STRUCTURAL STEEL

1. STRUCTURAL STEEL SHALL BE FABRICATED AND ERECTED IN ACCORDANCE WITH THE LATEST EDITION OF THE FOLLOWING:
   a. ANSI/AISC 360-10 "SPECIFICATION FOR STRUCTURAL STEEL BUILDINGS", WITH "COMMENTARY" AND "SUPPLEMENTS" AS REQUIRED BY BUILDING CODE.
   b. AISC 303-10 "CODE OF STANDARD PRACTICE FOR STEEL BUILDINGS AND BRIDGES" EXCLUDING THE FOLLOWING SECTIONS: 4.4, 4.4.1, AND 4.4.2.
   c. AISI "SPECIFICATIONS FOR THE DESIGN OF COLD-FORMED STEEL STRUCTURAL MEMBERS".
   d. AISC "SPECIFICATION FOR STRUCTURAL JOINTS USING ASTM A325 OR A490 BOLTS".
   e. AWS D1.1 AND 1.3, "STRUCTURAL WELDING CODE" (EXCEPT SPECIFIC ITEMS DO NOT APPLY IF THEY CONFLICT WITH AISC).
   f. ANSI/AISC 341-10 "SEISMIC PROVISIONS FOR STRUCTURAL STEEL BUILDINGS".
2. STRUCTURAL STEEL SHALL COMPLY WITH THE FOLLOWING:
   a. WIDE FLANGE SHAPES AND WT SHAPES - ASTM A992
   b. OTHER SHAPES AND PLATES - ASTM A-36 (UNO)
   c. TUBES (TS) AND HOLLOW STRUCTURAL SECTIONS (HSS) - ASTM A-500, GRADE B (SQUARE AND RECTANGULAR SHAPES FY = 46 KSI AND ROUND SHAPES FY = 42 KSI)
   d. PIPE COLUMNS - ASTM A-53, GRADE B TYPE E OR S
   e. DEFORMED BAR ANCHORS (DBA) - ASTM A-496, WELDED IN ACCORDANCE WITH AWS D1.1
   f. HEADED STUD ANCHORS (HSA) - ASTM A-108, GRADE 1015 STEEL AND WELDED IN ACCORDANCE WITH AWS D1.1 FOR TYPE "B". USE 3/4" DIAMETER STUDS, UNLESS NOTED OTHERWISE.
   g. THREADED ROD - ASTM A-449.
3. CONNECTIONS SHALL COMPLY WITH THE STRUCTURAL DRAWINGS UNLESS WRITTEN APPROVAL TO CHANGE IS GIVEN BY THE STRUCTURAL ENGINEER.
4. ALL SHOP FABRICATIONS SHALL BE PERFORMED BY AN APPROVED FABRICATOR IN ACCORDANCE WITH SECTIONS 1702 AND 1704 OF THE IBC OR WITH SHOP INSPECTION BY AN INDEPENDENT AGENCY IN ACCORDANCE WITH SECTION 1704.2.5 OF THE IBC.
5. WELDING
   a. ALL WELDING AND CUTTING SHALL BE PERFORMED BY AWS QUALIFIED WELDERS IN ACCORDANCE WITH ANSI/AWS D1.1 (LATEST EDITION).
   b. USE E-70XX ELECTRODES UNLESS NOTED OTHERWISE. E-60XX MAY BE USED FOR WELDING STEEL DECKS.
   c. ALL INTERSECTING STEEL SHAPES WHICH ARE NOT CONNECTED WITH BOLTS SHALL BE WELDED TOGETHER WITH A FILLET WELD ALL AROUND UNLESS NOTED OTHERWISE. WHERE WELD SIZES ARE NOT SHOWN USE THE FOLLOWING:
      1) WHERE ALL CONNECTED PARTS ARE THICKER THAN 1/4", WELD IS 1/16" LESS THAN THE THICKNESS OF THE THINNEST PART.
      2) WHERE ANY OF THE CONNECTED PARTS IS LESS THAN 1/4" THICK, WELD IS SAME AS THICKNESS OF THE THINNEST PART.
   d. WELDING OF HSA'S AND DBA'S SHALL CONFORM TO THE MANUFACTURER'S SPECIFICATIONS.
   e. WHEREVER POSSIBLE, WELDS SHALL BE SHOP WELDS. SPECIAL CONSIDERATIONS, SUCH AS ITEMS WHICH MAY NEED ADJUSTMENT AT THE SITE, REQUIRE THAT SOME WELDS BE FIELD WELDS. WHERE QUESTIONS OR DISCREPANCIES OCCUR THE CONTRACTOR SHALL COORDINATE THE WORK BETWEEN THE SHOP FABRICATOR AND THE STEEL ERECTOR.
6. BOLTING
   a. UNLESS NOTED OTHERWISE, ALL STRUCTURAL STEEL TO STEEL CONNECTIONS SHALL USE HIGH STRENGTH BOLTS CONFORMING TO ASTM A-325.
   b. UNLESS NOTED OTHERWISE, ALL BOLTING IS CLASSIFIED AS NON-SLIP CRITICAL BEARING TYPE CONNECTIONS WITH THREADS INCLUDED IN SHEAR PLANE. TIGHTEN BOLTS TO A SNUG TIGHT CONDITION, WITH ALL PLIES OF THE JOINT IN FIRM CONTACT.
   c. AT OVERSIZED AND SLOTTED HOLES, WASHERS SHALL CONFORM TO ASTM F-436 AND COMPLETELY COVER THE HOLE.
   d. WHERE A STEEL BEAM TO BEAM CONNECTION IS NOT SHOWN, PROVIDE AN AISC STANDARD FRAMED CONNECTION SIZED FOR 1/2 OF THE TOTAL LOAD CAPACITY OF THE BEAM FOR THE SPAN AND STEEL SPECIFIED.
7. PROVIDE FULL DEPTH WEB STIFFENER PLATES AT EACH SIDE OF STEEL BEAMS AT ALL BEARING (EXCEPT SECONDARY FRAMING) POINTS. STIFFENER PLATES SHALL BE THICKNESS SHOWN UNLESS NOTED OTHERWISE AND SHALL BE WELDED BOTH SIDES WITH FILLET WELDS ALL AROUND.

FLANGE WIDTH	STIFFENER THICKNESS	WELD THICKNESS
< 8 1/4"	1/4"	3/16"
8 1/4" < BF < 12 1/2"	3/8"	1/4"
12 1/2" < BF < 18"	1/2"	5/16"

8. FABRICATORS AND SUPPLIERS SHALL COORDINATE PAINT/FINISHES WITH REQUIREMENTS FOR DIRECT APPLIED INSULATION, FIREPROOFING, ETC. AS NOTED IN THE PROJECT SPECIFICATIONS.
9. WHEN DETERMINING THE FIRE RESISTANCE OF ASSEMBLIES, USE THE FOLLOWING: STEEL ROOF MEMBERS ARE CONSIDERED UN-RESTRAINED AND STEEL FLOOR FRAMING MEMBERS ARE CONSIDERED RESTRAINED.
10. UNLESS NOTED OTHERWISE, ALL HORIZONTAL FRAMING MEMBERS SHALL BE ERECTED WITH THE NATURAL CROWN UP.
11. UNLESS OTHERWISE SHOWN OR DETAILED IN THE PLANS , ALL STEEL COLUMNS, BEAMS, BRACES, STRUTS, ETC. SHALL BE CONTINUOUS BETWEEN CONNECTIONS OR SUPPORTS. SPLICES IN MEMBERS SHALL NOT BE PERMITTED WITHOUT WRITTEN APPROVAL BY THE ENGINEER OF RECORD.

J. MASONRY

1. ALL HOLLOW MASONRY UNITS SHALL CONFORM TO ASTM C-90.
   F'M (MINIMUM, FACTORED) 1,500 PSI
   MINIMUM UNIT STRENGTH 1,900 PSI (TESTED IN ACCORDANCE WITH ASTM C-140)
   ACCEPTABLE RANGE OF UNIT WEIGHT: 105 PCF TO 125 PCF
2. ALL GROUT (SITE MIXED OR PRE-MIXED) SHALL CONFORM TO ASTM C-476 OR SECTION 2.2A OF TMS 602-11/ACI 530.1-11/ASCE 6-11. GROUT SHALL BE PLACED WITH SUFFICIENT WATER FOR POURING WITHOUT SEGREGATION. DO NOT USE MORTAR FOR GROUT. MECHANICALLY VIBRATE ALL GROUT.
3. GROUT STOPS SHALL BE AN APPROVED PRODUCT DESIGNED AND MANUFACTURED FOR USE AS A GROUT STOP. GROUT STOP SUBMITTALS SHALL BE SUBMITTED TO THE ARCHITECT AND ENGINEER FOR REVIEW. OTHER GROUT STOP MATERIALS SUCH AS ASPHALT IMPREGNATED MATERIALS ARE NOT PERMITTED.
4. MORTAR SHALL BE TYPE S AND SHALL CONFORM TO ASTM C 270.
5. ALL MASONRY WORK SHALL CONFORM TO CHAPTER 21 OF THE IBC.
6. UNLESS NOTED OTHERWISE, MINIMUM REINFORCING IN ALL 8" MASONRY WALLS SHALL BE AS FOLLOWS:
   a. VERTICAL: # 5 BARS IN CELLS ADJACENT TO ALL OPENINGS, AT CORNERS AND AT A MAXIMUM SPACING OF 8" THROUGHOUT THE WALL. ALL VERTICAL REINFORCEMENT INCLUDING, BUT NOT LIMITED TO JAMBS, COLUMNS, AND WALL REINFORCING SHALL BE DOWELED INTO AND THROUGH THE FOUNDATION WALL AND INTO THE FOOTING BELOW UNLESS SPECIFICALLY DETAILED OTHERWISE.
   b. HORIZONTAL: (1) #5 BAR IN 8" DEEP "H" BLOCK BOND BEAM UNITS AT 24"O.C. AND AT FLOORS, ROOF AND TOP OF WALL. BOND BEAMS AT ROOF WILL SLOPE TO MATCH SLOPING ROOF.
7. ALL BLOCK CELLS CONTAINING REINFORCING, BOLTS, OR ANCHORS SHALL BE GROUTED SOLID.
8. PROVIDE (1) #5 (MINIMUM), IN GROUTED SPACE, ON ALL SIDES AND ADJACENT TO EVERY OPENING WHICH EXCEEDS 24" IN EITHER DIRECTION. HORIZONTAL BARS SHALL EXTEND 24" BEYOND THE CORNERS OF THE OPENING AND VERTICAL BARS SHALL EXTEND TO TOP OF WALL. VERTICAL REINFORCING SHALL BE PROVIDED AT ENDS, CORNERS AND EACH SIDE OF CONTROL JOINTS. SEE TYPICAL DETAILS FOR OPENINGS WHICH EXCEED 32" IN EITHER DIRECTION.
9. SOLID GROUTING OF MASONRY IS UNACCEPTABLE EXCEPT AS SPECIFICALLY NOTED ON PLANS AND SCHEDULES.
10. WHERE WALLS ARE NOT GROUTED SOLID, EACH GROUT POUR SHALL TERMINATE FLUSH WITH THE TOP OF THE UPPERMOST UNIT EXCEPT AT CELLS WITH VERTICAL REINFORCING WHERE GROUT SHALL BE 1-1/2" BELOW TOP OF UNIT TO PROVIDE CONSTRUCTION KEY. WHERE WALLS ARE GROUTED SOLID, EACH GROUT POUR SHALL TERMINATE 1-1/2" BELOW TOP OF UNIT.
11. GROUT POURS SHALL NOT EXCEED 5'-0" UNLESS HIGH LIFT GROUTING PROCEDURES ARE FOLLOWED.
12. THE USE OF HIGH LIFT GROUTING PROCEDURES REQUIRE THE APPROVAL OF THE ARCHITECT AND ENGINEER AND SHALL NOT EXCEED THE MAXIMUM HEIGHTS GIVEN IN TABLE 1.20.1 OF TMS 402-11/ACI 530-11/ASCE 5-11. GROUT DEMONSTRATION PANELS, AS PRESCRIBED BY THE ARCHITECT AND ENGINEER, SHALL BE REQUIRED WHERE REQUESTED GROUTING PROCEDURES DO NOT MEET THE LIMITS OF TABLE 1.20.1. ADDITIONALLY, ALL HIGH LIFT GROUTING SHALL REQUIRE SPECIAL INSPECTION PROCEDURES NEEDED TO VERIFY GROUT PLACEMENT DURING CONSTRUCTION. DURING THE SUBMITTAL FOR APPROVAL PROCESS, SUBMITTAL SHALL INCLUDE, BUT NOT BE LIMITED TO: STATEMENT OF PROCEDURE FOR MECHANICAL VIBRATION OF HIGH LIFT GROUT; NEW MIX DESIGNS FOR HIGH SLUMP, HIGH LIFT GROUT; FOR SELF-CONSOLIDATING GROUT, SUBMIT MIX DESIGNS, SLUMP FLOW RATES, VISUAL STABILITY INDEX (VSI), AND QUANTITIES OF ADMXTURES BEING USED.
13. ALL MASONRY BEAMS SHALL BE BUILT INTEGRAL WITH SUPPORT. NO TOOTHING OR DOWELING PERMITTED. UNITS WITH ONE END OPEN SHALL BE USED FOR ALL MASONRY BEAMS.
14. PROVIDE VERTICAL CONTROL JOINTS AT MAXIMUM SPACINGS NOTED BELOW UNLESS NOTED OTHERWISE IN THE SPECIFICATIONS AND/OR ON ARCHITECTURAL ELEVATIONS AND AT ALL CHANGES IN WALL ELEVATION AND MASONRY THICKNESS. CONTROL JOINTS SHALL NOT BE LOCATED DIRECTLY OVER OR CLOSER THAN 24" TO WALL OPENINGS (DOORS, WINDOWS, MECHANICAL OPENINGS, ETC.), OR WITHIN MASONRY JAMBS.
   REINFORCED MASONRY: 40 FT
   VENEER: 30 FT AND AT INTERFACE BETWEEN VENEER SUPPORTED BY FOUNDATIONS AND SUSPENDED STRUCTURAL ELEMENTS.
15. HORIZONTAL REINFORCEMENT SHALL TERMINATE AT EACH SIDE OF CONTROL JOINTS EXCEPT AT FLOOR AND ROOF LEVEL BOND BEAMS AND AT TOP OF PARAPET.
16. CONTROL JOINTS SHALL BE PROVIDED AT THE MASONRY SIDE OF EMBEDDED STEEL COLUMNS TO CONTROL CRACKING OF FACE SHELLS.
17. SUPPORT NON-BEARING, NON-STRUCTURAL WALLS AT TOP OF MASONRY AS PER TYPICAL DETAILS AT LOCATIONS WHERE INTERSECTING OR PERPENDICULAR WALLS ARE 12'-0" OR MORE APART OR WHERE END OF WALL OCCURS 6'-0" OR MORE FROM INTERSECTING WALL.
18. EMBED CHANNELS AND PLATES TO BE PLACED SO AS TO CREATE FLUSH SURFACE WITH FACE OF MASONRY. FLANGES ON CHANNEL EMBEDS SHALL BE HORIZONTAL.
19. ALL VERTICAL REINFORCING SHALL BE SECURED IN PLACE PRIOR TO GROUTING USING WIRE POSITIONERS OR OTHER ACCEPTABLE DEVICES. REINFORCING SHALL BE SECURED AT BAR-SPLICE LOCATIONS AND AT A SPACING NOT MORE THAN 120 BAR DIAMETERS.
20. UNLESS NOTED OTHERWISE, MASONRY WALLS SHALL BE CONSTRUCTED UTILIZING COMMON RUNNING-BOND WITH FULLY MORTARED BED JOINTS AROUND GROUTED CELLS.
   MASONRY VENEER SHALL BE ANCHORED USING THE HOHMANN AND BARNARD VENEER ANCHOR ASSEMBLY SYSTEM, OR AN APPROVED EQUAL. REGARDLESS OF BACK-UP SYSTEM, PROVIDE A CONTINUOUS HORIZONTAL 9 GAUGE WIRE AT 16"O.C. IN VENEER MORTAR JOINTS FOR ANCHOR ATTACHMENT. POSITIVE ANCHORAGE TO THE WIRE USING THE SEISMICLIP INTERLOCK SYSTEM SHALL BE PROVIDED TO SUPPORT NOT MORE THAN 2 SQUARE FEET OF WALL, WITH A HORIZONTAL SPACING NOT EXCEEDING 18".
   a. BRICK AND BLOCK WALLS; USE HOHMANN AND BARNARD 270-ML-S.I.S. (SEISMICLIP INTERLOCK SYSTEM) MIGHTY-LOK SEISMIC ANCHORS OR AN APPROVED EQUAL, AT SPACINGS NOTED ABOVE. INSTALL A 2 WIRE 9 GAUGE LADDER TYPE JOINT REINFORCEMENT AT 16"O.C. IN THE BACK-UP WALL FOR ANCHORAGE ATTACHMENT.
21. ELECTRICAL CONDUIT SHALL NOT BE PLACED IN CELLS THAT CONTAIN REBAR. CONDUIT IS ALLOWED TO PASS THROUGH REINFORCED CELLS WHEN IT OCCURS PERPENDICULAR TO THE REBAR. CONDUIT SHALL NOT CONTACT REBAR AS IT PASSES. THERE SHALL BE 1" CLEAR BETWEEN CONDUIT AND REBAR.

T. EXISTING BUILDING NOTES

1. ARW ENGINEERS EXPRESSLY DISCLAIMS RESPONSIBILITY FOR ANY PORTION OF THE EXISTING BUILDING NOT SPECIFICALLY ADDRESSED IN THESE DRAWINGS.
2. DRAWINGS AND DETAILS HAVE BEEN PREPARED TO REFLECT THE EXISTING CONDITIONS AND CONFIGURATIONS OF STRUCTURAL ELEMENTS. HOWEVER, THE CONTRACTOR IS ULTIMATELY RESPONSIBLE FOR VERIFYING ALL EXISTING CONDITIONS AND ALERTING THE ENGINEER OF ANY DISCREPANCIES FOUND PRIOR TO FABRICATING OR INSTALLING STRUCTURAL ELEMENTS.
3. THE CONTRACTOR IS RESPONSIBLE FOR MAKING SURE THAT THE BUILDING AND ELEMENTS WITHIN THE BUILDING REMAIN STABLE UNTIL CONSTRUCTION IS COMPLETE. AT NO ADDITIONAL COST TO THE OWNER, THE CONTRACTOR SHALL BE RESPONSIBLE FOR PROVIDING SHORING OR OTHER TEMPORARY SUPPORT OF STRUCTURAL MEMBERS UNTIL THE FINAL CONFIGURATION HAS BEEN COMPLETED.

Structural Sheet Index

SHEET NUMBER	SHEET NAME
S001	STRUCTURAL NOTES
S002	SCHEDULES
S003	SCHEDULES
S101	CANOPY PLANS
S201	DETAILS

MHTN
ARCHITECTS
MHTN Architects, Inc.
420 East South Temple
Suite 100
Salt Lake City, Utah 84111
Telephone (801) 595-6700
Telefax (801) 595-6717
www.mhtn.com

OGDEN SCHOOL DISTRICT
Empowering Excellence Through Education

OGDEN SCHOOL DISTRICT
HIGHLAND JUNIOR HIGH SCHOOL REMODEL
325 GRAMERCY AVE.
OGDEN, UTAH 84404

©2011 MHTN ARCHITECTS, INC.
Drawings, written material, and design concepts shall not be used or reproduced in whole or part in any form or format without prior written consent of MHTN Architects, Inc. Do not scale drawings. Use given dimensions only. If not shown, verify correct dimensions with the Architect. Contractor shall check and verify all dimensions and conditions at job site.

SEAL
PROFESSIONAL STRUCTURAL ENGINEER
Joshua L. Blazzard
No. 5251609
4/15/15
STATE OF UTAH

MHTN PROJECT NO. 2015505
DRAWN BY: Author CHECKED BY: Checker

ISSUED:

NO.	DATE	DESCRIPTION

CONTRACTOR TO VERIFY DRAWINGS IN FIELD USE REFLECT LAST REVISION DATE.

NO.	DATE	DESCRIPTION

SHEET NAME
STRUCTURAL NOTES
CONSTRUCTION DOCUMENTS
APRIL 15, 2015
SHEET NUMBER
S001

X:\DRAWINGS 2015\15607 - Highland JRHS Remodel\S-15607 - Highland Jr High Canopies (2015).rvt
4/10/2015 2:52:41 PM

SPECIAL INSPECTION SCHEDULE [1, 2]

ESTABLISHED PER 2012 IBC SECTION 110 AND CHAPTER 17

ITEM	CONTINUOUS[3]	PERIODIC[3]	REFERENCE	COMMENTS
PRE-FAB CONSTRUCTION (IBC 1704.2)			REFERENCE NOTES P1 & P2	P1. SPECIAL INSPECTION IS NOT REQUIRED WHERE THE WORK IS DONE ON THE PREMISES OF A FABRICATOR REGISTERED AND APPROVED TO PERFORM SUCH WORK WITHOUT SPECIAL INSPECTION, PROVIDED THE FABRICATOR COMPLIES WITH IBC. P2. INSPECTION FOR PREFABRICATED CONSTRUCTION SHALL BE THE SAME AS IF THE MATERIAL USED IN THE CONSTRUCTION TOOK PLACE ON SITE. SPECIAL INSPECTION WILL NOT BE REQUIRED DURING PREFABRICATION IF THE APPROVED AGENCY CERTIFIES THE CONSTRUCTION AND FURNISHES EVIDENCE OF COMPLIANCE. (SEE NOTE 2).
CONCRETE CONSTRUCTION (IBC 1705.3)			SEE IBC TABLE 1705.3 - REF. NOTE C1	C1. SPECIAL INSPECTION IS NOT REQUIRED FOR CONC. ISOLATED SPREAD FOOTINGS, CONTINUOUS FOOTINGS, NON-STRUCTURAL SLABS, FOUNDATION WALLS, PATIOS, DRIVEWAYS, AND SIDEWALKS PROVIDED THE REQUIREMENTS OF IBC 1705.3 ARE MET. C2. PERIODIC SPECIAL INSPECTION IS ALLOWED FOR VERIFICATION OF THE WELDABILITY OF REINFORCING STEEL RESISTING FLEXURAL AND AXIAL FORCES IN INTERMEDIATE AND SPECIAL MOMENT FRAMES, BOUNDARY ELEMENTS OF SPECIAL REINFORCED CONCRETE SHEAR WALLS, AND SHEAR REINFORCEMENT. PERIODIC SPECIAL INSPECTION IS ALLOWED FOR WELDING OF OTHER ASTM A 706 REINFORCING STEEL NOT INCLUDED IN THE CONTINOUS SPECIAL INSPECTION REQUIREMENTS NOTED ABOVE. C3. PERFORM AIR, SLUMP AND TEMP. TESTS WHEN CONCRETE SAMPLES ARE CAST. C4. PERIODIC SPECIAL INSPECTION IS REQUIRED FOR VERIFICATION OF IN-SITU CONCRETE STRENGTH FOR POST-TENSIONED CONCRETE PRIOR TO TENSIONING TENDONS OR REMOVING SHORING OR FORMS. C5. EPOXY AND EXPANSION ANCHORS INTO MASONRY OR CONCRETE MAY BE USED ONLY WHEN APPROVED BY ARCHITECT. AND/OR ENGINEER USING AN APPROVED PRODUCT WITH CURRENT PUBLISHED ICC RESEARCH REPORT NUMBERS. COORDINATE CONTINUOUS/PERIODIC SPECIAL INSPECTION REQUIREMENTS WITH ICC REPORT.
REINFORCING STEEL PLACEMENT		●		
WELDING OF REINFORCING STEEL	●	●	REFERENCE NOTE C2	
EMBEDDED BOLTS & PLATES	●			
VERIFYING REQUIRED DESIGN MIX		●		
CONCRETE PLACEMENT / SAMPLING	●		REFERENCE NOTE C3	
CURING TEMPERATURE / TECHNIQUES		●		
PRESTRESSED CONCRETE				
APPLICATION OF PRESTRESSING FORCES	●			
GROUTING BONDED TENDONS	●		IN SEISMIC-FORCE-RESISTING SYSTEM	
ERECTION OF PRECAST MEMBERS		●		
VERIFICATION OF IN-SITU STRENGTH		●	REFERENCE NOTE C4	
EPOXY / EXPANSION ANCHOR PLACEMENT	●	●	REFERENCE NOTE C5	
MASONRY CONSTRUCTION (IBC 1705.4)			SEE TMS 402/ACI 550 TABLE 1.19.2 (NON-ESSENTIAL)	M1. PERIODIC SPECIAL INSPECTION IS ALLOWED FOR VERIFICATION OF THE WELDABILITY OF REINFORCING STEEL OTHER THAN ASTM A 706 IN ACCORDANCE WITH ANSI / AWS D1.4. CONTINUOUS SPECIAL INSPECTION IS REQUIRED FOR REINFORCING STEEL RESISTING FLEXURAL AND AXIAL FORCES IN INTERMEDIATE AND SPECIAL MOMENT FRAMES, BOUNDARY ELEMENTS OF SPECIAL REINFORCED CONCRETE SHEAR WALLS, AND SHEAR REINFORCEMENT. PERIODIC SPECIAL INSPECTION IS ALLOWED FOR WELDING OF OTHER ASTM A 706 REINFORCING STEEL NOT INCLUDED IN THE CONTINUOUS SPECIAL INSPECTION REQUIREMENTS NOTED ABOVE. M2. CONTINUOUS SPECIAL INSPECTION IS REQUIRED FOR ESSENTIAL FACILITIES (TMS 402/ACI 530 TABLE 1.19.3). M3. EPOXY AND EXPANSION ANCHORS INTO MASONRY OR CONCRETE MAY BE USED ONLY WHEN APPROVED BY ARCHITECT AND/ORENGINEER USING AN APPROVED PRODUCT WITH CURRENT PUBLISHED ICC RESEARCH REPORT NUMBERS. COORDINATE CONTINUOUS/PERIODIC SPECIAL INSPECTION REQUIREMENTS WITH ICC REPORT.
AS MASONRY CONSTRUCTION BEGINS, VERIFY:				
SITE PREPARED MORTAR		●		
MORTAR JOINTS		●		
REINFORCEMENT / CONNECTORS		●		
PRE-STRESSING TECHNIQUES		●		
GRADE & SIZE OF TENDONS & ANCHORAGES		●		
INSPECTION SHALL VERIFY:				
SIZE & LOCATION OF STRUCTURAL ELEMENTS		●		
TYPE, SIZE, & LOCATION OF ANCHORS		●	REFERENCE NOTE M2	
SIZE, GRADE & TYPE OF REINFORCEMENT		●		
WELDING OF REINFORCING BARS	●		REFERENCE NOTE M1	
HOT OR COLD WEATHER PROTECTION		●		
MEASUREMENT OF PRE-STRESSING FORCE		●	REFERENCE NOTE M2	
PRIOR TO GROUTING, VERIFY:				
CLEAN GROUT SPACE		●	REFERENCE NOTE M2	
PLACEMENT OF REINFORCEMENT CONNECTORS, TENDONS AND ANCHORS.		●		
PROPORTIONS OF SITE PREPARED GROUT		●		
CONSTRUCTION OF MORTAR JOINTS		●		
GROUT PLACEMENT	●			
GROUTING OF PRE-STRESSING BONDED TENDONS	●			
PREPARATION OF TEST SPECIMENS / PRISMS	●			
COMPLIANCE W/ CONST. DOCS. / SUBMITTALS		●		
EPOXY / EXPANSION ANCHOR PLACEMENT	●	●	REFERENCE NOTE M3	
VERIFICATION OF f'm AND f'aac		●		
SELF CONSOLIDATING GROUT:				
VERIFY SLUMP FLOW AND VSI	●			
SOILS (IBC 1705.6)			REFERENCE NOTE F1	F1. SPECIAL INSPECTION OF SOILS SHALL REFERENCE THE APPROVED SOILS REPORT TO DETERMINE COMPLIANCE. F2. WHERE SOILS REPORT IS NOT PROVIDED SPECIAL INSPECTIONS ARE REQUIRED TO VERIFY THAT THE IN-PLACE DRY DENSITY OF THE COMPACTED FILL IS NOT LESS THAN 90 PERCENT OF THE MAXIMUM DRY DENSITY AT OPTIMUM MOISTURE CONTENT DETERMINED IN ACCORDANCE WITH ASTM D 1557.
VERIFY ADEQUATE MATERIALS BELOW FOOTINGS		●	REFERENCE NOTE F1	
EXCAVATIONS EXTEND TO PROPER DEPTH AND REACH PROPER MATERIAL		●	REFERENCE NOTE F2	
CLASSIFY & TEST CONTROLLED FILL MATERIALS		●	REFERENCE NOTE F2	
PERFORM MATERIALS, DENSITIES, AND LIFT THICKNESSES DURING PLACEMENT AND COMPACTION OF CONTROLLED FILL.	●		REFERENCE NOTE F1	
PROPERLY PREPARED SITE AND SUB-GRADE PRIOR TO FILL.		●	REFERENCE NOTE F1	

GENERAL SPECIAL INSPECTION NOTES :

1. THE ITEMS MARKED WITH A "●" IN THE SPECIAL INSPECTION SCHEDULE SHALL BE INSPECTED IN ACCORDANCE WITH IBC CHAPTER 17 BY A CERTIFIED SPECIAL INSPECTOR FROM AN ESTABLISHED TESTING AGENCY. FOR MATERIAL SAMPLING AND TESTING REQUIREMENTS, REFER TO THE MATERIAL SAMPLING AND TESTING SECTION, THE PROJECT SPECIFICATIONS, AND THE SPECIFIC GENERAL NOTES SECTIONS. THE TESTING AGENCY SHALL SEND COPIES OF ALL STRUCTURAL TESTING AND INSPECTION REPORTS DIRECTLY TO THE ARCHITECT, ENGINEER, CONTRACTOR, AND BUILDING OFFICIAL. ANY ITEMS WHICH FAIL TO COMPLY WITH THE APPROVED CONSTRUCTION DOCUMENTS SHALL IMMEDIATELY BE BROUGHT TO THE ATTENTION OF THE CONTRACTOR FOR CORRECTION. IF DISCREPANCIES ARE NOT CORRECTED, THEY SHALL BE BROUGHT TO THE ATTENTION OF THE BUILDING OFFICIAL, ARCHITECT, AND ENGINEER PRIOR TO COMPLETION OF THAT PHASE OF WORK. SPECIAL INSPECTION TESTING REQUIREMENTS APPLY EQUALLY TO ALL BIDDER DESIGNED COMPONENTS.
2. ANY CONSTRUCTION OR MATERIAL THAT HAS FAILED INSPECTION SHALL BE SUBJECT TO REMOVAL AND REPLACEMENT.
3. CONTINUOUS SPECIAL INSPECTION MEANS THE FULL-TIME OBSERVATION OF WORK REQUIRING SPECIAL INSPECTION BY AN APPROVED SPECIAL INSPECTOR WHO IS PRESENT IN THE AREA WHERE THE WORK IS BEING PERFORMED. PERIODIC SPECIAL INSPECTION MEANS THE PART-TIME OR INTERMITTENT OBSERVATION OF WORK REQUIRING SPECIAL INSPECTION BY AN APPROVED SPECIAL INSPECTOR WHO IS PRESENT IN THE AREA WHERE THE WORK HAS BEEN OR IS BEING PERFORMED AND AT THE COMPLETION OF THE WORK. (IBC SECTION 1702)

LEGEND OF SYMBOLS AND ABBREVIATIONS

AB	=	ANCHOR BOLT
ABV	=	ABOVE
ARCH	=	ARCHITECT
BLW	=	BELOW
BN	=	BOUNDARY NAILING
BRB	=	BUCKLING RESTRAINED BRACE
BRBF	=	BUCKLING RESTRAINED BRACE FRAME
CJP	=	COMPLETE JOINT PENETRATION
CL	=	CENTER LINE
CMU	=	CONCRETE MASONRY UNIT
COL	=	COLUMN
CONC	=	CONCRETE
CP	=	CONCRETE PIER
DC	=	DEMAND CRITICAL
DIA / Ø	=	DIAMETER
DBA	=	DEFORMED BAR ANCHOR
DBE	=	DECK BEARING ELEVATION
ELEV	=	ELEVATION
EN	=	EDGE NAILING
EOD	=	EDGE OF DECK
FDN	=	FOUNDATION
FTG	=	FOOTING
FFE	=	FINISHED FLOOR ELEVATION
GB	=	CONCRETE GRADE BEAM
HSA	=	HEADED STUD ANCHOR
JBE	=	JOIST BEARING ELEVATION
KB	=	KICKER BRACE
MAX	=	MAXIMUM
MB	=	MASONRY BEAM
MC	=	MASONRY COLUMN
MECH	=	MECHANICAL
MEZZ	=	MEZZANINE
MIN	=	MINIMUM
MJ	=	MASONRY JAMB
MW	=	MASONRY WALL
NS, FS	=	NEAR SIDE, FARSIDE
OAE	=	OR APPROVED EQUAL
OPP	=	OPPOSITE
PAF	=	POWDER ACTUATED FASTENER
PL	=	PLATE
REINF	=	REINFORCING
REQ	=	REQUIRED
SIM	=	SIMILAR
SSH	=	STEEL STUD HEADER
SSJ	=	STEEL STUD JAMB
SSS	=	STEEL STUD SILL
SSW	=	STEEL STUD WALL
TOF	=	TOP OF FOOTING
TOB	=	TOP OF BEAM ELEVATION
TOM	=	TOP OF MASONRY ELEVATION
TOC	=	TOP OF CONCRETE SLAB
TOG	=	TOP OF GIRDER ELEVATION
TOS	=	TOP OF STEEL ELEVATION
TYP	=	TYPICAL
UNO	=	UNLESS NOTED OTHERWISE

FOOTING MARK
TOP OF FOOTING ELEV.
SECTION MARK
SHEET NUMBER
TOP OF FOUNDATION WALL OR COLUMN PIER ELEV.
SHEAR WALL - SEE SCHEDULE
MIN. LENGTH OF SHEAR WALL
S — S FOOTING STEP
MASONRY WALL
MASONRY WALL W/ CONCRETE FOUNDATION BELOW
DEPRESS FDN./WALL AND POUR FLOOR SLAB OVER AT MASONRY FOUNDATION WALL
DEPRESS FDN./WALL AND POUR FLOOR SLAB OVER AT CONCRETE FOUNDATION WALL
MASONRY BEAM
CONCRETE BEAM
"A"
HD POST
HD - SIMPSON HOLD DOWN SIZE POST - SIZE OF END POST CONNECTED TO HOLD DOWN
"A" - PLAN CONFIGURATION AT HOLD DOWN AT FOUNDATION
ELEVATION
L FRAMING ANGLE SEE TYPICAL DETAIL
C FRAMING CHANNEL SEE TYPICAL DETAIL
L ITEMS, DETAILS, & SYSTEMS WHICH ARE PART OF THE LATERAL FORCE RESISTING SYSTEM.
MOMENT RESISTING CONNECTIONS - SEE DETAIL
MOMENT RESISTING CANTILEVER CONNECTIONS - SEE DETAIL
KB KICKER BRACE

2012 IBC CONC. REBAR LAP SPLICE SCHEDULE

FOR CONCRETE APPLICATIONS (ACI 318 - 11)

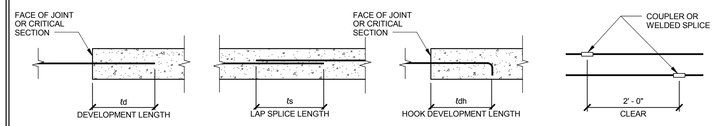

BAR LOCATION	CONCRETE		CONCRETE REINFORCING & SPLICE LENGTHS (IN)																													
			BAR SIZE																													
	TYPE	STRENGTH	#3			#4			#5			#6			#7			#8			#9		#10		#11							
			td	ts	tdh	td	ts	tdh	td	ts	tdh	td	ts	tdh	td	ts	tdh	td	ts	tdh	td	tdh	td	tdh	td	tdh						
VERT. WALL BARS, FILL ON METAL DECK	NWC	3000 PSI	17	22	8	22	29	8	28	36	10	33	43	12	48	62	13	55	72	15	62	17	69	19	76	30						
HORIZ. WALL BARS, FOOTING TOP BARS	NWC	3000 PSI	17	22	8	22	29	8	28	36	10	33	43	12	48	62	13	55	72	15	62	17	69	19	76	30						
BEAM BOTTOM BARS, COLUMN BARS	NWC	3000 PSI	17	22	8	22	29	11	28	36	14	33	43	16	48	62	19	55	72	22	62	25	69	27	76	30						
FOOTING BOTTOM BARS	NWC	3000 PSI	12	16	8	14	18	8	17	22	10	20	26	12	29	38	13	33	43	15	37	17	42	19	46	30						
BEAM TOP BARS	NWC	3000 PSI	22	29	8	29	38	11	36	47	14	43	56	16	63	82	19	72	94	22	81	25	90	27	98	30						
SLAB ON GRADE	NWC	3000 PSI	12	16	8	14	18	8	17	22	10	20	26	12	32	42	13	42	55	15	53	17	69	19	76	30						

BAR LOCATION	CONCRETE		CONCRETE REINFORCING & SPLICE LENGTHS (IN)																													
			BAR SIZE																													
	TYPE	STRENGTH	#3			#4			#5			#6			#7			#8			#9		#10		#11							
			td	ts	tdh	td	ts	tdh	td	ts	tdh	td	ts	tdh	td	ts	tdh	td	ts	tdh	td	tdh	td	tdh	td	tdh						
VERT. WALL BARS, FILL ON METAL DECK	NWC	4500 PSI	14	18	7	18	23	6	23	30	8	27	35	9	40	52	11	45	59	13	51	14	56	16	62	25						
HORIZ. WALL BARS, FOOTING TOP BARS	NWC	4500 PSI	14	18	7	18	23	6	23	30	8	27	35	9	40	52	11	45	59	13	51	14	56	16	62	25						
BEAM BOTTOM BARS, COLUMN BARS	NWC	4500 PSI	14	18	7	18	23	9	23	30	11	27	35	13	40	52	16	45	59	18	51	20	56	22	62	25						
FOOTING BOTTOM BARS	NWC	4500 PSI	12	16	7	12	16	6	14	18	8	17	22	9	24	31	11	27	35	13	31	14	34	16	37	25						
BEAM TOP BARS	NWC	4500 PSI	18	23	7	24	31	9	30	39	11	35	46	13	51	66	16	59	77	18	66	20	73	22	80	25						
SLAB ON GRADE	NWC	4500 PSI	12	16	7	12	16	6	14	18	8	17	22	9	27	35	11	34	44	13	44	14	56	16	62	25						

NOTES :

1. MECHANICAL COUPLERS MAY BE USED IN LIEU OF LAP SPLICES SHOWN. SEE STRUCTURAL NOTES FOR MINIMUM COUPLER CAPACITY. WHERE MECHANICAL COUPLERS ARE USED, STAGGER ADJACENT SPLICES A MINIMUM OF 24" AS INDICATED ABOVE.
2. DEVELOPMENT LENGTHS SHALL BE INCREASED BY 50% FOR STRAIGHT BAR DEVELOPMENT AND 20% FOR HOOKED BARS WHERE EPOXY COATING IS USED.
3. WHEN SPLICING BARS OF DIFFERENT SIZES, USE LAP SPLICE LENGTH OF LARGER BARS UNO.
4. SPLICE BARS LARGER THAN #11 USING MECHANICAL COUPLERS.

2012 IBC MASONRY REBAR LAP SPLICE SCHEDULE

FOR MASONRY APPLICATIONS (ACI 530 - 11)

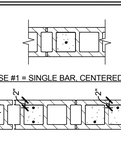

BAR LOCATION	MASONRY REINFORCING & SPLICE LENGTHS (IN) (f'm = 1500psi)											
	BAR SIZE											
	#3		#4		#5		#6		#7			
	CASE #		CASE #		CASE #		CASE #		CASE #			
	1	2	1	2	1	2	1	2	1	2		
BEAM / WALL HORIZONTAL	20"		26"		32"		39"		45"			
WALL VERTICAL COLUMN AND JAMB	12"	16"	14"	29"	22"	45"	43"	54"	59"	63"		

NOTES :

1. MECHANICAL COUPLERS MAY BE USED IN LIEU OF LAP SPLICES SHOWN. SEE STRUCTURAL NOTES FOR MINIMUM COUPLER CAPACITY. WHERE MECHANICAL COUPLERS ARE USED, STAGGER ADJACENT SPLICES A MINIMUM OF 24" AS INDICATED ABOVE.
2. DEVELOPMENT LENGTHS SHALL BE INCREASED BY 50% WHERE EPOXY COATED REBAR IS USED.
3. WHEN SPLICING BARS OF DIFFERENT SIZES, USE LAP SPLICE LENGTH OF LARGER BARS UNO.
4. ALL REBAR #6 AND LARGER IN MASONRY SHALL BE SPLICED USING MECHANICAL SPLICES. SEE STRUCTURAL NOTES FOR MINIMUM COUPLER CAPACITY.

FOOTING SCHEDULE

MARK	WIDTH	LENGTH	THICK	LENGTHWISE REINF.		CROSSWISE REINF.			REMARKS
				NO.	SIZE	NO.	SIZE	SPA.	
FC2	2'-0"	CONT.	12"	(2)	#5	--	--	--	
FC5.5	5'-6"	SEE PLAN	18"	(5)	#5	(13)	#5	--	REINF. TOP & BOTTOM
FC6.5	6'-6"	SEE PLAN	SEE PLAN/ 5/S201	(6)	#5	(10)	#5	--	REINF. TOP & BOTTOM
F3	3'-0"	3'-0"	12"	(3)	#5	(3)	#5	--	

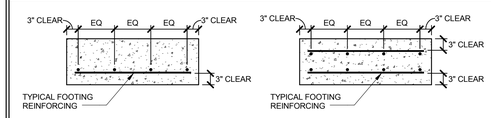

TYP. FOOTING SECTION

TYP. FOOTING SECTION W/ TOP & BOTTOM REINF.

STANDARD HOOK & BEND SCHEDULE

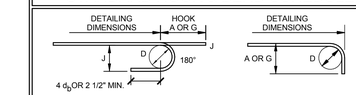

d_b = BAR DIAMETER
D = FINISHED INSIDE BEND DIAMETER

D = $6d_b$ FOR #3 THROUGH #8
D = $8d_b$ FOR #9 THROUGH #11

BAR SIZE	DIMENSION OF STANDARD 180-DEG HOOKS, ALL GRADES			DIMENSION OF STANDARD 90-DEG HOOKS, ALL GRADES	
	A or G	J	D	A or G	D
#3	5"	3"	2 1/4"	6"	2 1/4"
#4	6"	4"	3"	8"	3"
#5	7"	5"	3 3/4"	10"	3 3/4"
#6	8"	6"	4 1/2"	1'-0"	4 1/2"
#7	10"	7"	5 1/4"	1'-2"	5 1/4"
#8	11"	8"	6"	1'-4"	6"
#9	1'-3"	11 3/4"	9 1/2"	1'-7"	9 1/2"
#10	1'-5"	1'-1 1/4"	10 3/4"	1'-10"	10 3/4"
#11	1'-7"	1'-2 3/4"	12"	2'-0"	12"

MHTN ARCHITECTS
MHTN Architects, Inc.
420 East South Temple
Suite 100
Salt Lake City, Utah 84111
Telephone (801) 595-6700
Telefax (801) 595-6717
www.mhtn.com

OGDEN SCHOOL DISTRICT
Empowering Excellence Through Education

OGDEN SCHOOL DISTRICT
HIGHLAND JUNIOR HIGH SCHOOL
REMODEL
325 GRAMERCY AVE.
OGDEN, UTAH 84404

©2011 MHTN ARCHITECTS, INC.
Drawings, written material, and design concepts shall not be used or reproduced in whole or part in any form or format without prior written consent of MHTN Architects, Inc. Do not scale drawings. Use given dimensions only. If not shown, verify correct dimensions with the Architect. Contractor shall check and verify all dimensions and conditions at job site.

SEAL

PROFESSIONAL STRUCTURAL ENGINEER
Joshua L. Blazzard
No. 5251609
4/15/15
STATE OF UTAH

MHTN PROJECT NO: 2015505
DRAWN BY: Author CHECKED BY: Checker

ISSUED

NO.	DATE	DESCRIPTION

CONTRACTOR TO VERIFY DRAWINGS IN FIELD USE REFLECT LAST REVISION DATE.

NO.	DATE	DESCRIPTION

SHEET NAME
SCHEDULES

CONSTRUCTION DOCUMENTS
APRIL 15, 2015

SHEET NUMBER
S002

X:\DRAWINGS 2015\15607 - Highland JRHS Remodel\S-15607 - Highland Jr High Canopies (2015).rvt
4/10/2015 2:52:43 PM

STRUCTURAL STEEL SPECIAL INSPECTION SCHEDULE

ESTABLISHED PER 2012 IBC SECTION 1705.2.1

INSPECTION TASKS PRIOR TO WELDING (TABLE N5.4-1)	FABRICATOR QUALITY CONTROL		SPECIAL INSPECTOR QUALITY ASSURANCE	
	CONTINUOUS	PERIODIC	CONTINUOUS	PERIODIC
WELDING PROCEDURE SPECIFICATIONS (WPSs) AVAILABLE	●		●	
MANUFACTURER CERTIFICATIONS FOR WELDING CONSUMABLES AVAILABLE	●		●	
MATERIAL IDENTIFICATION (TYPE / GRADE)		●		●
WELDER IDENTIFICATION SYSTEM [1]		●		●
FIT-UP OF GROOVE WELDS (INCLUDING JOINT GEOMETRY)				
* JOINT PREPARATION				
* DIMENSIONS (ALIGNMENT, ROOT OPENING, ROOT FACE, BEVEL)		●		●
* CLEANLINESS (CONDITION OF STEEL SURFACES)				
* TACKING (TACK WELD QUALITY AND LOCATION)				
* BACKING TYPE AND FIT (IF APPLICABLE)				
CONFIGURATION AND FINISH OF ACCESS HOLES		●		●
FIT-UP OF FILLET WELDS				
* DIMENSIONS (ALIGNMENT, GAPS AT ROOT)		●		●
* CLEANLINESS (CONDITION OF STEEL SURFACES)				
* TACKING (TACK WELD QUALITY AND LOCATION)				
CHECK WELDING EQUIPMENT		●		

[1] *THE FABRICATOR OR ERECTOR, AS APPLICABLE, SHALL MAINTAIN A SYSTEM BY WHICH A WELDER WHO HAS WELDED A JOINT OR MEMBER CAN BE IDENTIFIED. STAMPS, IF USED, SHALL BE THE LOW-STRESS TYPE.*

INSPECTION TASKS DURING WELDING (TABLE N5.4-2)	CONTINUOUS	PERIODIC	CONTINUOUS	PERIODIC
USE OF QUALIFIED WELDERS		●		●
CONTROL AND HANDLING OF WELDING CONSUMABLES				
* PACKAGING		●		●
* EXPOSURE CONTROL				
NO WELDING OVER CRACKED TACK WELDS		●		●
ENVIRONMENTAL CONDITIONS				
* WIND SPEED WITHIN LIMITS		●		●
* PRECIPITATION AND TEMPERATURE				
WPS FOLLOWED				
* SETTINGS ON WELDING EQUIPMENT				
* TRAVEL SPEED				
* SELECTED WELDING MATERIALS		●		●
* SHIELDING GAS TYPE / FLOW RATE				
* PREHEAT APPLIED				
* INTERPASS TEMPERATURE MAINTAINED (MIN. / MAX)				
* PROPER POSITION (F, V, H, OH)				
WELDING TECHNIQUES				
* INTERPASS AND FINAL CLEANING				
* EACH PASS WITHIN PROFILE LIMITATIONS		●		●
* EACH PASS MEETS QUALITY REQUIREMENTS				

INSPECTION TASKS AFTER WELDING (TABLE N5.4-3)	CONTINUOUS	PERIODIC	CONTINUOUS	PERIODIC
WELDS CLEANED		●		●
SIZE, LENGTH AND LOCATION OF WELDS	●		●	
WELDS MEET VISUAL ACCEPTANCE CRITERIA				
* CRACK PROHIBITION				
* WELD / BASE-METAL FUSION				
* CRATER CROSS SECTION	●		●	
* WELD PROFILES				
* WELD SIZE				
* UNDERCUT				
* POROSITY				
ARC STRIKES	●		●	
K-AREA [1]	●		●	
BACKING REMOVED AND WELD TABS REMOVED (IF REQUIRED)	●		●	
REPAIR ACTIVITIES	●		●	
DOCUMENT ACCEPTANCE OR REJECTION OF WELDED JOINT OR MEMBER	●		●	

[1] *WHEN WELDING OF DOUBLER PLATES, CONTINUITY PLATES OR STIFFENERS HAS BEEN PERFORMED IN THE K-AREA, VISUALLY INSPECT THE WEB K-AREA FOR CRACKS WITHIN 3 IN. (75mm) OF THE WELD)*

1. PERIODIC - OBSERVE THESE ITEMS ON A RANDOM BASIS. OPERATIONS NEED NOT BE DELAYED PENDING THESE INSPECTIONS.
2. CONTINUOUS - PERFORM THESE TASKS FOR EACH WELDED JOINT OR MEMBER.
3. QUALITY CONTROL (QC) SHALL BE PROVIDED BY THE FABRICATOR AND ERECTOR.
4. QUALITY ASSURANCE (QA) SHALL BE PROVIDED BY OTHERS WHEN REQUIRED BY THE AUTHORITY HAVING JURISDICTION (AHJ), APPLICABLE BUILDING CODE (ABC), PURCHASER, OWNER, OR ENGINEER OF RECORD (EOR). NONDESTRUCTIVE TESTING (NDT) SHALL BE PERFORMED BY THE AGENCY OR FIRM RESPONSIBLE FOR QUALITY ASSURANCE, EXCEPT AS PERMITTED IN ACCORDANCE WITH SECTION N7.
5. QC AND QA INSPECTORS SHALL BE QUALIFIED IN ACCORDANCE WITH AISC 360-10 CHAPTER N4.
6. NONDESTRUCTIVE TESTING PERSONNEL SHALL BE QUALIFIED IN ACCORDANCE WITH AISC 360-10 CHAPTER N4.3.
7. NONDESTRUCTIVE TESTING OF WELDED JOINTS SHALL COMPLY WITH AISC 360-10 CHAPTER N5a AND b.
8. OBSERVATION OF WELDING OPERATIONS AND VISUAL INSPECTION OF IN-PROCESS AND COMPLETED WELDS SHALL BE THE PRIMARY METHOD TO CONFIRM THAT THE MATERIALS, PROCEDURES AND WORKMANSHIP ARE IN CONFORMANCE WITH THE CONSTRUCTION DOCUMENTS. FOR STRUCTURAL STEEL, ALL PROVISIONS OF AWS D1.1 / D1.1M STRUCTURAL WELDING CODE - STEEL FOR STATICALLY LOADED STRUCTURES SHALL APPLY.
9. THERMALLY CUT SURFACES OF ACCESS HOLES SHALL BE TESTED BY QA USING MT OR PT, WHEN THE FLANGE THICKNESS EXCEEDS 2 IN. (50mm) FOR ROLLED SHAPES, OR WHEN THE WEB THICKNESS EXCEEDS 2 IN. (50mm) FOR BUILT-UP SHAPES. ANY CRACK SHALL BE DEEMED UNACCEPTABLE REGARDLESS OF SIZE OR LOCATION.
10. WHEN REQUIRED BY APPENDIX 3, TABLE A-3.1, WELDED JOINTS REQUIRING WELD SOUNDNESS TO BE ESTABLISHED BY RADIOGRAPHICS OR ULTRASONIC INSPECTION SHALL BE TESTED BY QA AS PRESCRIBED. REDUCTION IN THE RATE OF UT IS PROHIBITED.
11. REDUCTION OF RATE OF ULTRASONIC TESTING - THE RATE OF UT IS ONLY PERMITTED TO BE REDUCED IF APPROVED BY THE EOR AND THE AHJ PER AISC 360-10 CHAPTER N5e.
12. FOR STRUCTURES IN RISK CATEGORY II, WHERE THE INITIAL RATE FOR UT IS 10%, THE NDT RATE FOR AN INDIVIDUAL WELDER OR WELDING OPERATOR SHALL BE INCREASED TO 100% SHOULD THE REJECT RATE, THE NUMBER OF WELDS CONTAINING UNACCEPTABLE DEFECTS DIVIDED BY THE NUMBER OF WELDS COMPLETED, EXCEEDS 5% OF THE WELDS TESTED FOR THE WELDER OR WELDING OPERATOR. A SAMPLING OF AT LEAST 20 COMPLETED WELDS FOR A JOB SHALL BE MADE PRIOR TO IMPLEMENTING SUCH AN INCREASE. WHEN THE REJECT RATE FOR THE WELDER OR WELDING OPERATOR, AFTER A SAMPLING OF AT LEAST 40 COMPLETED WELDS, HAS FALLEN TO 5% OR LESS, THE RATE OF UT SHALL BE RETURNED TO 10%. FOR EVALUATING THE REJECT RATE OF CONTINUOUS WELDS OVER 3 FT (1M) IN LENGTH WHERE THE EFFECTIVE THROAT IS 1 IN. (25mm) OR LESS, EACH 12 IN. (300mm) INCREMENT OR FRACTION THEREOF SHALL BE CONSIDERED AS ONE WELD. FOR EVALUATING THE REJECT RATE ON CONTINUOUS WELDS OVER 3 FT (1M) IN LENGTH WHERE THE EFFECTIVE THROAT IS GREATER THAN 1 IN. (25mm), EACH 6 IN. (150mm) OF LENGTH OR FRACTION THEREOF SHALL BE CONSIDERED ON WELD.
13. ALL NDT PERFORMED SHALL BE DOCUMENTED. FOR SHOP FABRICATION, THE NDT REPORT SHALL IDENTIFY THE TESTED WELD BY PIECE MARK AND LOCATION IN THE PIECE. FOR FIELD WORK, THE NDT REPORT SHALL IDENTIFY THE TESTED WELD BY LOCATION IN THE STRUCTURE, PIECE MARK, AND LOCATION IN THE PIECE. WHEN A WELD IS REJECTED ON THE BASIS OF NDT, THE NDT RECORD SHALL INDICATE THE LOCATION OF THE DEFECT AND THE BASIS OF REJECTION
14. DEMAND CRITICAL WELDS SHALL MEET THE PROVISION FOUND IN AISC 341-10 AND WELDING METHODS, PROCEDURES AND QUALITY CONTROL SHALL COMPLY WITH AWS D1.1 AND THE FOLLOWING:
    a. ARC STRIKES, GOUGES AND OTHER IMPERFECTIONS WITHIN 3 IN. (75mm) OF THE JOINT, SHALL BE REPAIRED OR REMOVED.
    b. PREHEAT AND INTER-PASS REQUIREMENTS AS OUTLINED IN SECTION 3.5.
    c. UNREPAIRED CRACKS, GOUGES, AND NOTCHES WILL NOT BE PERMITTED IN THE JOINT AREA.
    d. USE ELECTRODES WITH CHARPY V-NOTCH ABSORBED ENERGY EQUAL TO OR GREATER THAN 20 FT-LBS AT -20 DEGREES FAHRENHEIT UNDER AWS A5 CLASSIFICATION TEST METHODS, AND 40 FT-LBS AT 70 DEGREES FAHRENHEIT USING TEST PROCEDURES PRESCRIBED IN APPENDIX X OF AISC 358. ACCEPTABLE ELECTRODES INCLUDE E70TG-K2, E71 T-1.

INSPECTION TASKS PRIOR TO BOLTING (TABLE N5.6-1)	CONTINUOUS	PERIODIC	CONTINUOUS	PERIODIC
MANUFACTURER'S CERTIFICATIONS AVAILABLE FOR FASTENER MATERIALS		●	●	
FASTENERS MARKED IN ACCORDANCE WITH ASTM REQUIREMENTS		●		●
PROPER FASTENERS SELECTED FOR THE JOINT DETAIL (GRADE, TYPE, BOLT LENGTH IF THREADS ARE TO BE EXCLUDED FROM SHEAR PLANE)		●		●
PROPER BOLTING PROCEDURES SELECTED FOR JOINT DETAIL		●		●
CONNECTING ELEMENTS, INCLUDING THE APPROPRIATE FAYING SURFACE CONDITION AND HOLE PREPARATION, IF SPECIFIED, MEET APPLICABLE REQUIREMENTS		●		●
PRE-INSTALLATION VERIFICATION TESTING BY INSTALLATION PERSONNEL OBSERVED AND DOCUMENTED FOR FASTENER ASSEMBLIES AND METHODS USED	●			●
PROPER STORAGE PROVIDED FOR BOLTS, NUTS, WASHERS AND OTHER FASTENER COMPONENTS		●		●

INSPECTION TASKS DURING BOLTING (TABLE N5.6-2)	CONTINUOUS	PERIODIC	CONTINUOUS	PERIODIC
FASTENER ASSEMBLIES, OF SUITABLE CONDITION, PLACED IN ALL HOLES AND WASHERS (IF REQUIRED) ARE POSITIONED AS REQUIRED		●		●
JOINT BROUGHT TO THE SNUG-TIGHT CONDITION PRIOR TO THE PRETENSIONING OPERATION		●		●
FASTENER COMPONENT NOT TURNED BY THE WRENCH PREVENTED FROM ROTATING		●		●
FASTENERS ARE PRETENSIONED IN ACCORDANCE WITH THE RCSC SPECIFICATION, PROGRESSING SYSTEMATICALLY FROM THE MOST RIGID POINT TOWARD THE FREE EDGES		●		●

INSPECTION TASKS AFTER BOLTING (TABLE N5.6-3)	CONTINUOUS	PERIODIC	CONTINUOUS	PERIODIC
DOCUMENT ACCEPTANCE OR REJECTION OF BOLTED CONNECTIONS	●		●	

INSPECTION OF STEEL ELEMENTS OF COMPOSITE CONSTRUCTION PRIOR TO CONCRETE PLACEMENT (TABLE N6.1)	CONTINUOUS	PERIODIC	CONTINUOUS	PERIODIC
PLACEMENT AND INSTALLATION OF STEEL DECK	●		●	
PLACEMENT AND INSTALLATION OF STEEL STUD ANCHORS	●		●	
DOCUMENT ACCEPTANCE OR REJECTION OF STEEL ELEMENTS	●		●	

NOTES

1. PERIODIC - OBSERVE THESE ITEMS ON A RANDOM BASIS. OPERATIONS NEED NOT BE DELAYED PENDING THESE INSPECTIONS.
2. CONTINUOUS - PERFORM THESE TASKS FOR EACH BOLTED CONNECTION.
3. QUALITY CONTROL (QC) SHALL BE PROVIDED BY THE FABRICATOR AND ERECTOR.
4. QUALITY ASSURANCE (QA) SHALL BE PROVIDED BY OTHERS WHEN REQUIRED BY THE AUTHORITY HAVING JURISDICTION (AHJ), APPLICABLE BUILDING CODE (ABC), PURCHASER, OWNER, OR ENGINEER OF RECORD (EOR). NONDESTRUCTIVE TESTING (NDT) SHALL BE PERFORMED BY THE AGENCY OR FIRM RESPONSIBLE FOR QUALITY ASSURANCE, EXCEPT AS PERMITTED IN ACCORDANCE WITH SECTION N7.
5. FOR SNUG-TIGHT JOINTS, PRE-INSTALLATION VERIFICATION TESTING AS SPECIFIED IN TABLE N5.6-1 AND MONITORING OF THE INSTALLATION PROCEDURES AS SPECIFIED IN TABLE N5.6-2 ARE NOT APPLICABLE. THE QCI AND QAI NEED NOT BE PRESENT DURING THE INSTALLATION OF FASTENERS IN SNUG-TIGHT JOINTS.
6. FOR PRETENSIONED JOINTS AND SLIP-CRITICAL JOINTS, WHEN THE INSTALLER IS USING THE TURN-OF-NUT METHOD WITH MATCHMARKING TECHNIQUES, THE DIRECT-TENSION-INDICATOR METHOD, OR THE TWIST-OFF-TYPE TENSION CONTROL BOLT METHOD, MONITORING OF BOLT PRETENSIONING PROCEDURES SHALL BE AS SPECIFIED IN TABLE N5.6-2. THE QCI AND QAI NEED NOT BE PRESENT DURING THE INSTALLATION OF FASTENERS WHEN THESE METHODS ARE USED BY THE INSTALLER.
7. FOR PRETENSIONED JOINTS AND SLIP-CRITICAL JOINTS, WHEN THE INSTALLER IS USING THE CALIBRATED WRENCH METHOD OR THE TURN-OF-NUT METHOD WITHOUT MATCHMARKING, MONITORING OF BOLT PRETENSIONING PROCEDURES SHALL BE AS SPECIFIED IN TABLE N5.6-2. THE QCI AND QAI SHALL BE ENGAGED IN THEIR ASSIGNED INSPECTION DUTIES DURING INSTALLATION OF FASTENERS WHEN THESE METHODS ARE USED BY THE INSTALLER.
8. OBSERVATION OF BOLTING OPERATIONS SHALL BE THE PRIMARY METHOD USED TO CONFIRM THAT THE MATERIALS, PROCEDURES AND WORKMANSHIP INCORPORATED IN CONSTRUCTION ARE IN CONFORMANCE WITH THE CONSTRUCTION DOCUMENTS AND THE PROVISIONS OF THE RCSC SPECIFICATION.

NOTES

1. O - OBSERVE THESE ITEMS ON A RANDOM BASIS. OPERATIONS NEED NOT BE DELAYED PENDING THESE INSPECTIONS.
2. P - PERFORM THESE TASKS FOR EACH BOLTED CONNECTION.
3. QUALITY CONTROL (QC) SHALL BE PROVIDED BY THE FABRICATOR AND ERECTOR.
4. QUALITY ASSURANCE (QA) SHALL BE PROVIDED BY OTHERS WHEN REQUIRED BY THE AUTHORITY HAVING JURISDICTION (AHJ), APPLICABLE BUILDING CODE (ABC), PURCHASER, OWNER, OR ENGINEER OF RECORD (EOR). NONDESTRUCTIVE TESTING (NDT) SHALL BE PERFORMED BY THE AGENCY OR FIRM RESPONSIBLE FOR QUALITY ASSURANCE, EXCEPT AS PERMITTED IN ACCORDANCE WITH SECTION N7.
5. FOR THOSE ITEMS FOR QUALITY CONTROL (QC) THAT CONTAIN AN OBSERVE DESIGNATION, THE QC INSPECTION SHALL BE PERFORMED BY THE ERECTOR'S QUALITY CONTROL INSPECTOR (QCI).
6. FOR WELDING OF STEEL HEADED STUD ANCHORS, THE PROVISIONS OF AWS D1.1 / D1.1M, APPLY.
7. FOR WELDING OF STEEL DECK, OBSERVATION OF WELDING OPERATIONS AND VISUAL INSPECTION OF IN-PROCESS AND COMPLETED WELDS SHALL BE THE PRIMARY METHOD TO CONFIRM THAT THE MATERIALS, PROCEDURES AND WORKMANSHIP ARE IN CONFORMANCE WITH THE CONSTRUCTION DOCUMENTS. ALL APPLICABLE PROVISIONS OF AWS D1.3 / D1.3M, STRUCTURAL WELDING CODE - SHEET STEEL, SHALL APPLY. DECK WELDING INSPECTION SHALL INCLUDE VERIFICATION OF THE WELDING CONSUMABLES, WELDING PROCEDURE SPECIFICATIONS AND QUALIFICATIONS OF WELDING PERSONNEL PRIOR TO THE START OF THE WORK, OBSERVATIONS OF THE WORK IN PROGRESS, AND A VISUAL INSPECTION OF ALL COMPLETED WELDS. FOR STEEL DECK ATTACHED BY FASTENING SYSTEMS OTHER THAN WELDING, INSPECTION SHALL INCLUDE VERIFICATION OF THE FASTENERS TO BE USED PRIOR TO THE START OF THE WORK, OBSERVATIONS OF THE WORK IN PROGRESS TO CONFIRM INSTALLATION IN CONFORMANCE WITH THE MANUFACTURER'S RECOMMENDATIONS, AND A VISUAL INSPECTION OF THE COMPLETED INSTALLATION.

GENERAL STEEL SPECIAL INSPECTION NOTES :

1. QUALITY ASSURANCE (QA) INSPECTION OF FABRICATED ITEMS SHALL BE MADE AT THE FABRICATOR'S PLANT. THE QUALITY ASSURANCE INSPECTOR (QAI) SHALL SCHEDULE THIS WORK TO MINIMIZE INTERRUPTION TO THE WORK OF THE FABRICATOR.
2. QA INSPECTION OF THE ERECTED STEEL SYSTEM SHALL BE MADE AT THE PROJECT SITE. THE QAI SHALL SCHEDULE THIS WORK TO MINIMIZE INTERRUPTION TO THE WORK OF THE ERECTOR.
3. WHERE A TASK IS NOTED TO BE PERFORMED BY BOTH QC AND QA, IT IS PERMITTED TO COORDINATE THE INSPECTION FUNCTIONS BETWEEN THE QCI AND QAI SO THAT THE INSPECTION FUNCTIONS ARE PERFORMED BY ONLY ONE PARTY. WHERE QA RELIES UPON INSPECTION FUNCTIONS PERFORMED BY QC, THE APPROVAL OF THE ENGINEER OF RECORD AND THE AUTHORITY HAVING JURISDICTION IS REQUIRED.
4. THE FABRICATOR'S QCI SHALL INSPECT THE FABRICATED STEEL TO VERIFY COMPLIANCE WITH THE DETAILS SHOWN ON THE SHOP DRAWINGS, SUCH AS PROPER APPLICATION OF JOINT DETAILS AT EACH CONNECTION. THE ERECTOR'S QCI SHALL INSPECT THE ERECTED STEEL FRAME TO VERIFY COMPLIANCE WITH THE DETAILS SHOWN ON THE ERECTION DRAWINGS, SUCH AS BRACES, STIFFENERS, MEMBER LOCATIONS AND PROPER APPLICATION OF JOINT DETAILS AT EACH CONNECTION.
5. THE QAI SHALL BE ON THE PREMISES FOR INSPECTION DURING THE PLACEMENT OF ANCHOR RODS AND OTHER EMBEDMENTS SUPPORTING STRUCTURAL STEEL FOR COMPLIANCE WITH THE CONSTRUCTION DOCUMENTS. AS A MINIMUM, THE DIAMETER, GRADE, TYPE AND LENGTH OF THE ANCHOR ROD OR EMBEDDED ITEM, AND THE EXTENT OR DEPTH OF EMBEDMENT INTO THE CONCRETE, SHALL BE VERIFIED PRIOR TO PLACEMENT OF THE CONCRETE.
6. THE QAI SHALL INSPECT THE FABRICATED STEEL OR ERECTED STEEL FRAME, AS APPROPRIATE, TO VERIFY COMPLIANCE WITH THE DETAILS SHOWN ON THE CONSTRUCTION DOCUMENTS, SUCH AS BRACES, STIFFENERS, MEMBER LOCATIONS AND PROPER APPLICATION OF JOINT DETAILS AT EACH CONNECTION.
7. QUALITY ASSURANCE (QA) INSPECTIONS, EXCEPT NONDESTRUCTIVE TESTING (NDT), MAY BE WAIVED WHEN THE WORK IS PERFORMED IN A FABRICATING SHOP OR BY AN ERECTOR APPROVED BY THE AUTHORITY HAVING JURISDICTION (AHJ) TO PERFORM THE WORK WITHOUT QA. NDT OF WELDS COMPLETED IN AN APPROVED FABRICATOR'S SHOP MAY BE PERFORMED BY THAT FABRICATOR WHEN APPROVED BY THE AHJ. WHEN THE FABRICATOR PERFORMS THE NDT, THE QA AGENCY SHALL REVIEW THE FABRICATOR'S NDT REPORTS.
8. AT COMPLETION OF FABRICATION, THE APPROVED FABRICATOR SHALL SUBMIT A CERTIFICATE OF COMPLIANCE TO THE AHJ STATING THAT THE MATERIALS SUPPLIED AND WORK PERFORMED BY THE FABRICATOR ARE IN ACCORDANCE WITH THE CONSTRUCTION DOCUMENTS. AT COMPLETION OF ERECTION, THE APPROVED ERECTOR SHALL SUBMIT A CERTIFICATE OF COMPLIANCE TO THE AHJ STATING THAT THE MATERIALS SUPPLIED AND WORK PERFORMED BY THE ERECTOR ARE IN ACCORDANCE WITH THE CONSTRUCTION DOCUMENTS.
9. IDENTIFICATION AND REJECTION OF MATERIAL OR WORKMANSHIP THAT IS NOT IN CONFORMANCE WITH THE CONSTRUCTION DOCUMENTS, SHALL BE PERMITTED AT ANY TIME DURING THE PROGRESS OF THE WORK. HOWEVER, THIS PROVISION SHALL NOT RELIEVE THE OWNER OR THE INSPECTOR OF THE OBLIGATION FOR TIMELY, IN-SEQUENCE INSPECTIONS. NONCONFORMING MATERIAL AND WORKMANSHIP SHALL BE BROUGHT TO THE IMMEDIATE ATTENTION OF THE FABRICATOR OR ERECTOR, AS APPLICABLE.
10. NONCONFORMING MATERIAL OR WORKMANSHIP SHALL BE BROUGHT INTO CONIFORMANCE, OR MADE SUITABLE FOR ITS INTENDED PURPOSE AS DETERMINED BY THE ENGINEER OF RECORD.
11. CONCURRENT WITH THE SUBMITTAL OF SUCH REPORTS TO THE AHJ, EOR OR OWNER, THE QA AGENCY SHALL SUBMIT TO THE FABRICATOR AND ERECTOR:
    (1) NONCONFORMANCE REPORTS
    (2) REPORTS OF REPAIR, REPLACEMENT OR ACCEPTANCE OF NONCONFORMING ITEMS.

MHTN ARCHITECTS
MHTN Architects, Inc.
420 East South Temple
Suite 100
Salt Lake City, Utah 84111
Telephone (801) 595-6700
Telefax (801) 595-6717
www.mhtn.com

OGDEN SCHOOL DISTRICT
Empowering Excellence Through Education

OGDEN SCHOOL DISTRICT

HIGHLAND JUNIOR HIGH SCHOOL
REMODEL
325 GRAMERCY AVE.
OGDEN, UTAH 84404

©2011 MHTN ARCHITECTS, INC.
Drawings, written material, and design concepts shall not be used or reproduced in any form or format without prior written consent of MHTN Architects, Inc. Do not scale drawings. Use given dimensions only. If not shown, verify correct dimensions with the Architect. Contractor shall check and verify all dimensions and conditions at job site.

SEAL

MHTN PROJECT NO. 2015505

DRAWN BY: Author CHECKED BY: Checker

ISSUED:

NO.	DATE	DESCRIPTION

CONTRACTOR TO VERIFY DRAWINGS IN FIELD USE REFLECT LAST REVISION DATE:

NO.	DATE	DESCRIPTION

SHEET NAME
SCHEDULES

CONSTRUCTION DOCUMENTS

APRIL 15, 2015

SHEET NUMBER

S003

X:\DRAWINGS 2015\15607 - Highland JRHS Remodel\S-15607 - Highland Jr High Canopies (2015).rvt
4/10/2015 2:52:43 PM

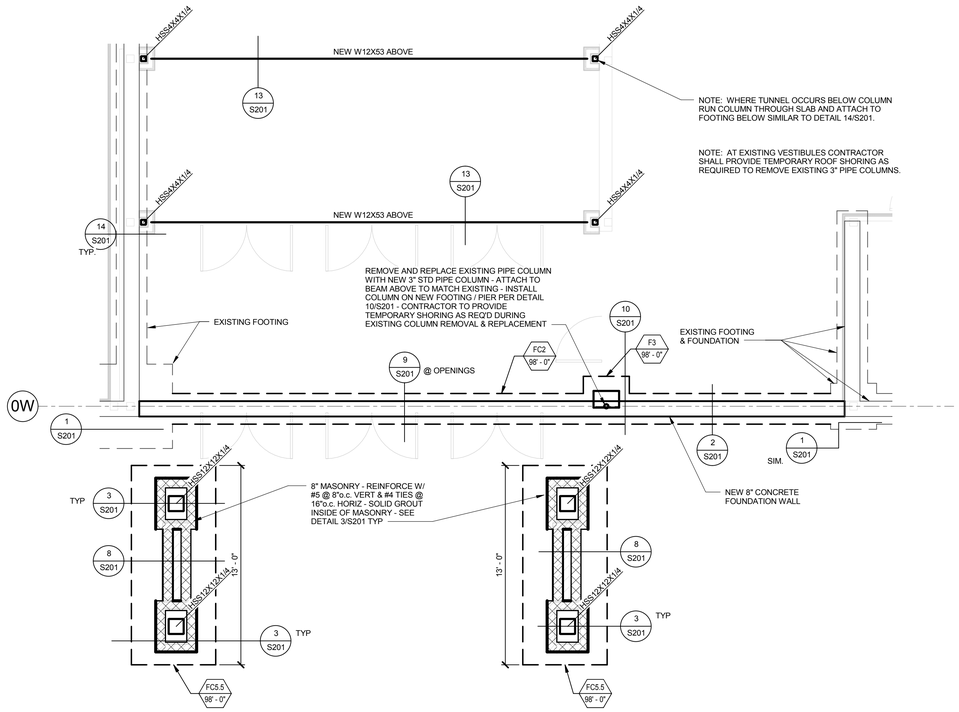

FOOTING AND FOUNDATION PLAN - ENTRY
SCALE : 1/4" = 1'-0"
A S101 NORTH

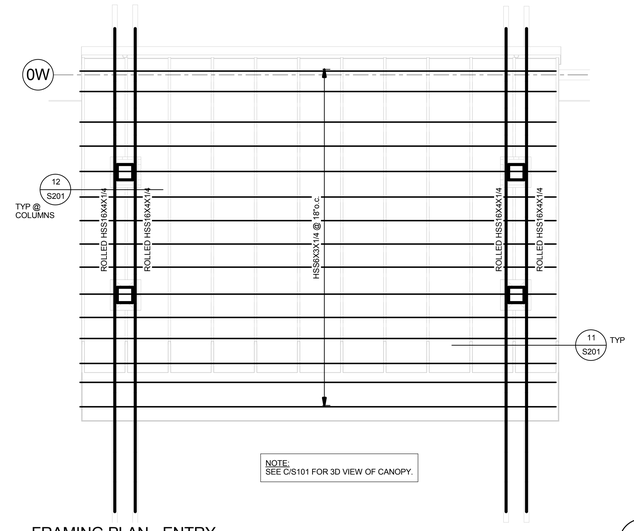

FRAMING PLAN - ENTRY
SCALE : 1/4" = 1'-0"
B S101 NORTH

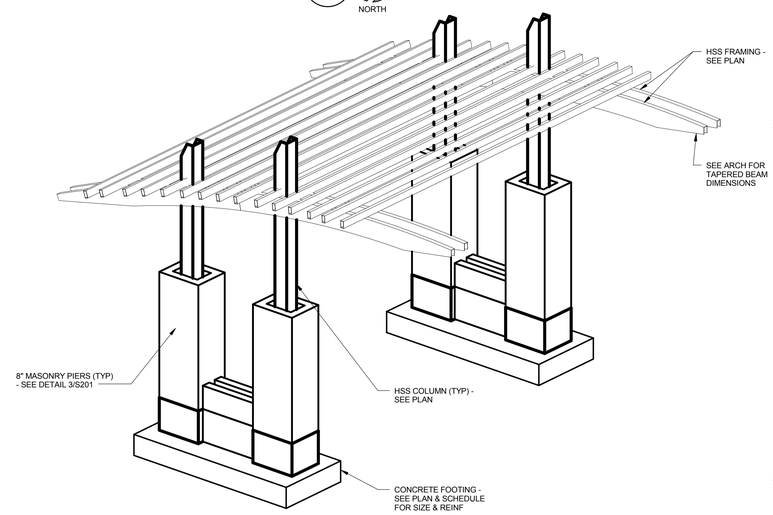

ENTRY CANOPY SCHEMATIC 3D VIEW
SCALE :
C S101

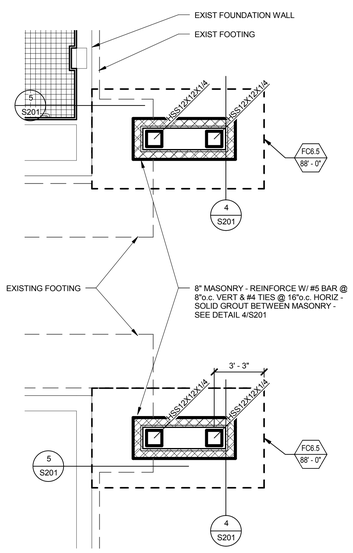

FOOTING AND FOUNDATION PLAN - GYM CANOPY
SCALE : 1/4" = 1'-0"
NORTH D S101

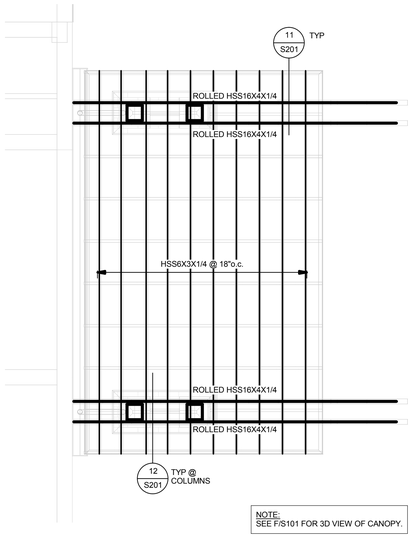

FRAMING PLAN - GYM CANOPY
SCALE : 1/4" = 1'-0"
NORTH E S101

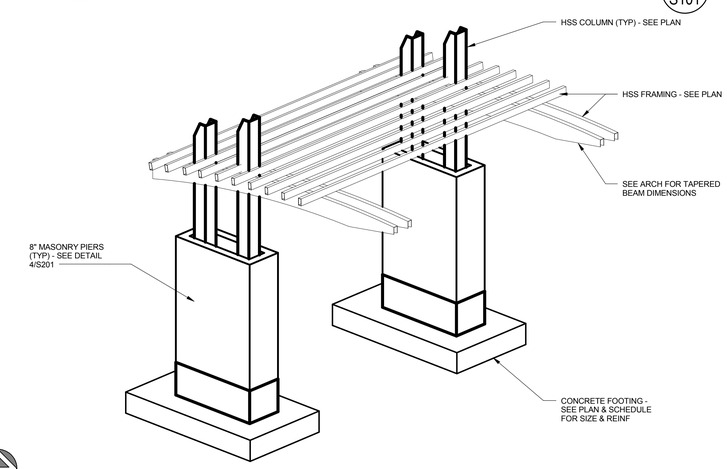

GYM CANOPY SCHEMATIC 3D VIEW
SCALE :
F S101

X:\DRAWINGS 2015\15607 - Highland JRHS Remodel\S-15607 - Highland Jr High Canopies (2015).rvt
4/10/2015 2:52:44 PM

MHTN
ARCHITECTS
MHTN Architects, Inc.
420 East South Temple
Suite 100
Salt Lake City, Utah 84111
Telephone (801) 595-6700
Telefax (801) 595-6717
www.mhtn.com

OGDEN SCHOOL DISTRICT
Empowering Excellence Through Education

OGDEN SCHOOL DISTRICT
HIGHLAND AND JUNIOR HIGH SCHOOL REMODEL
325 GRAMERCY AVE.
OGDEN, UTAH 84404

©2011 MHTN ARCHITECTS, INC.
Drawings, written material, and design concepts shall not be used or reproduced in whole or in part in any form or format without prior written consent of MHTN Architects, Inc. Do not scale drawings. Use given dimensions only. If not shown, verify correct dimensions with the Architect. Contractor shall check and verify all dimensions and conditions at job site.

SEAL

MHTN PROJECT NO. 2015505
DRAWN BY: Author CHECKED BY: Checker

ISSUED:

NO.	DATE	DESCRIPTION

CONTRACTOR TO VERIFY DRAWINGS IN FIELD USE REFLECT LAST REVISION DATE:

NO.	DATE	DESCRIPTION

SHEET NAME
CANOPY PLANS

CONSTRUCTION DOCUMENTS
APRIL 15, 2015

SHEET NUMBER
S101

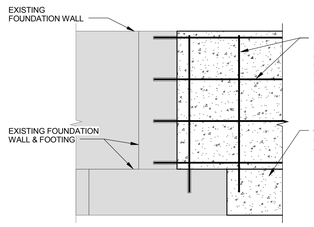

TYP. FOOTING & FOUNDATION INTO EXISTING FOOTING & FOUNDATION
SCALE : NONE
1 S201

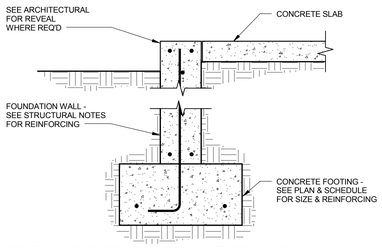

TYP. MASONRY ON CONC. FNDN. WALL DETAIL
SCALE : NONE
2 S201

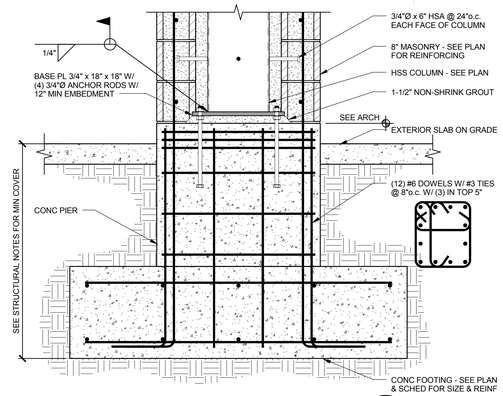

DETAIL
SCALE : NONE
3 S201

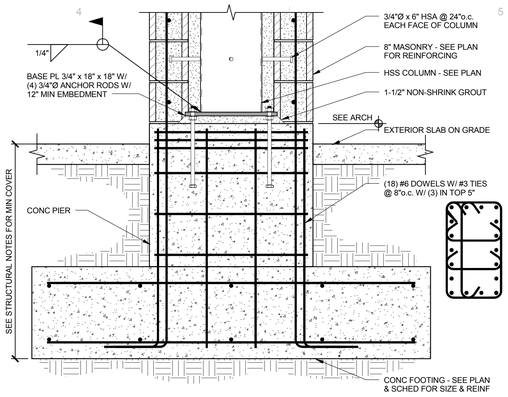

DETAIL
SCALE : NONE
4 S201

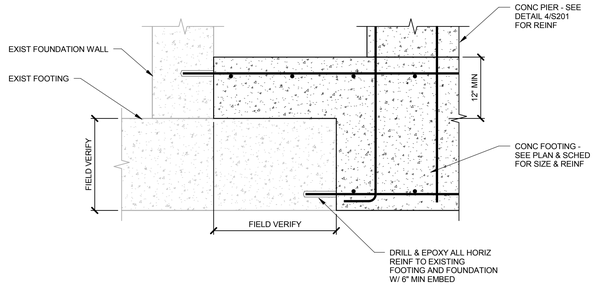

DETAIL
SCALE : NONE
5 S201

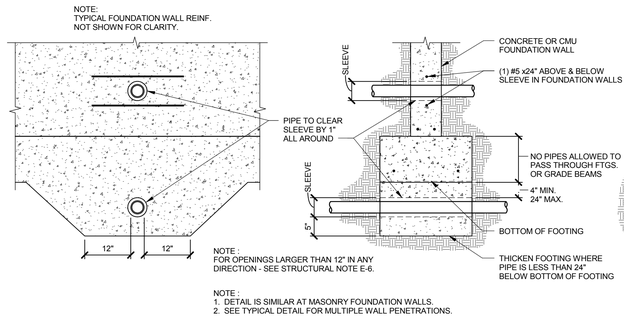

ALLOWABLE PIPING LOCATIONS @ FOOTING DETAIL
SCALE : NONE
6 S201

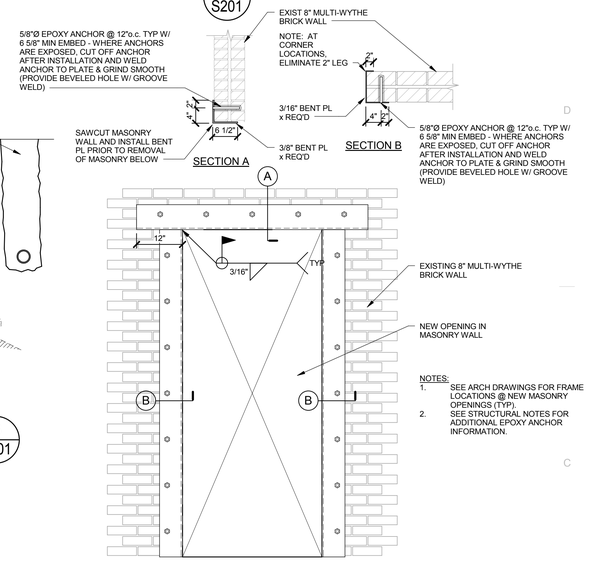

TYPICAL OPENING IN EXISTING WALL
SCALE : NONE
7 S201

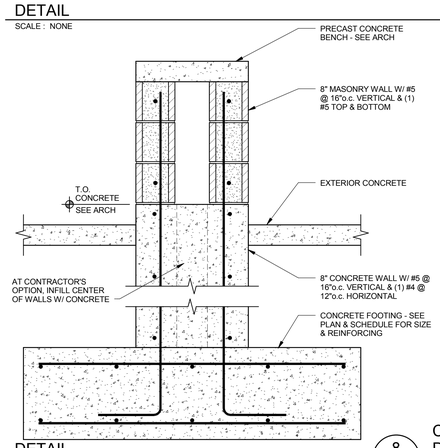

DETAIL
SCALE : NONE
8 S201

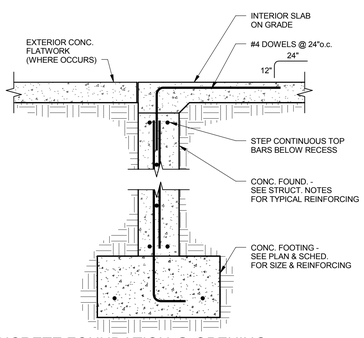

CONCRETE FOUNDATION @ OPENING DETAIL
SCALE : NONE
9 S201

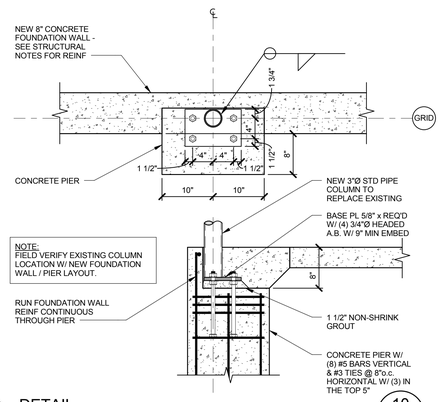

DETAIL
SCALE : NONE
10 S201

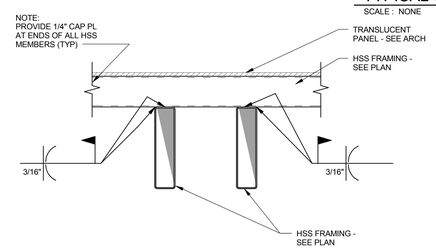

DETAIL
SCALE : NONE
11 S201

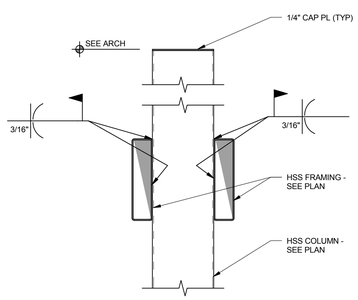

DETAIL
SCALE : NONE
12 S201

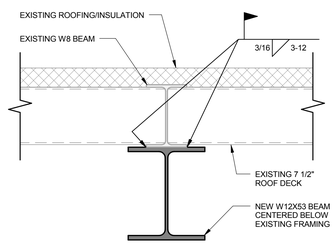

NOTE: CONTRACTOR IS RESPONSIBLE FOR PROVIDING TEMPORARY ROOF SHORING AS REQUIRED DURING REMOVAL OF EXISTING 3" STD PIPE COLUMNS SUPPORTING W8 FRAMING SHOWN AND DURING INSTALLATION OF NEW W12 SUPPORT BEAM.

DETAIL
SCALE : NONE
13 S201

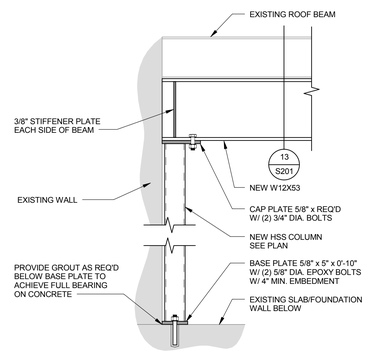

DETAIL
SCALE : NONE
14 S201

X:\DRAWINGS 2015\15607 - Highland JRHS Remodel\S-15607 - Highland Jr High Canopies (2015).rvt
4/10/2015 2:52:46 PM

MHTN ARCHITECTS
MHTN Architects, Inc.
420 East South Temple
Suite 100
Salt Lake City, Utah 84111
Telephone (801) 595-6700
Telefax (801) 595-6717
www.mhtn.com

OGDEN SCHOOL DISTRICT
Empowering Excellence Through Education

OGDEN SCHOOL DISTRICT
HIGHLAND AND JUNIOR HIGH SCHOOL REMODEL
325 GRAMERCY AVE.
OGDEN, UTAH 84404

©2011 MHTN ARCHITECTS, INC.
Drawings, written material, and design concepts shall not be used or reproduced in whole or part, in any form or format without prior written consent of MHTN Architects, Inc. Do not scale drawings. Use given dimensions only. If not shown, verify correct dimensions with the Architect. Contractor shall check and verify all dimensions and conditions at job site.

SEAL

MHTN PROJECT NO. 2015505
DRAWN BY: Author CHECKED BY: Checker

ISSUED:

NO.	DATE	DESCRIPTION

CONTRACTOR TO VERIFY DRAWINGS IN FIELD USE REFLECT LAST REVISION DATE:

NO.	DATE	DESCRIPTION

SHEET NAME
DETAILS

CONSTRUCTION DOCUMENTS
APRIL 15, 2015

SHEET NUMBER
S201

GENERAL NOTES

1. CONTRACTOR SHALL VERIFY ALL EXISTING SITE, BUILDING CONDITIONS AND DIMENSIONS BEFORE SUBMITTING A BID, INCLUDING BUT NOT LIMITED TO UNDERGROUND UTILITIES AND SERVICE LINES, IRRIGATION LINES AND SUB SURFACE STRUCTURES AND ALL OTHER EXISTING CONSTRUCTION BOTH ABOVE AND BELOW GRADE, OR BEFORE PROCEEDING WITH ANY PORTION OF THE WORK.

2. GENERAL CONTRACTOR SHALL PROTECT ALL EXISTING CONSTRUCTION TO REMAIN FROM DAMAGE DURING BOTH DEMOLITION AND NEW CONSTRUCTION WORK AND SHALL REPAIR ANY DAMAGE RESULTING FROM THIS WORK.

3. CUT AND PATCH EXISTING BUILDING CONSTRUCTION AS REQUIRED. CUTTING AND DRILLING OF STRUCTURAL MEMBERS NOT DETAILED REQUIRES THE WRITTEN PERMISSION OF THE STRUCTURAL ENGINEER.

4. CONTRACTOR SHALL RELOCATE EXISTING MECHANICAL AND ELECTRICAL AS REQUIRED FOR INSTALLATION OF NEW WORK.

5. ALL DEMOLISHED OR REMOVED EXISTING MATERIAL SHALL BE LEGALLY DISPOSED OF BY THE CONTRACTOR, UNLESS NOTED OTHERWISE.

6. THE CONTRACTOR SHALL COORDINATE PHASING OF THE WORK WITH THE OWNER AND ARCHITECT TO MEET THE OWNERS SCHEDULE.

7. ALL CONSTRUCTION ACTIVITY IS TO BE CONTAINED W/I CONSTRUCTION BARRICADES OR FENCES, CONTRACTORS SHALL PROTECT OWNER'S EXIST. CONSTRUCTION ADJ. TO NEW CONSTRUCTION. AFTER WORK OF THIS CONTRACT, CLEAN EXIST. AREAS EFFECTED BY THE WORK TO THE OWNERS SATISFACTION.

8. PATCH AND REPAIR ALL EXIST. WALLS WHERE AFFECTED BY DEMOLITION & NEW CONSTRUCTION TO MATCH EXISTING FINISH.

9. WHERE MASONRY WALLS ARE TO BE DEMOLISHED CUT REBAR OFF BELOW SLAB AND PATCH FOR NEW FLOORING.

LEGEND - DEMOLITION

- EXISTING WALL TO REMAIN
- EXISTING ELEMENT TO REMAIN; INCLUDING BUT NOT LIMITED TO DOORS, WINDOWS, EQUIPMENT
- EXISTING MASONRY WALL, OR PORTION THERE OF, TO BE REMOVED. COORDINATE WITH ARCHITECTURAL FLOOR PLANS FOR NEW OPENINGS IN EXISTING WALLS.
- EXISTING ELEMENT TO BE REMOVED; INCLUDING BUT NOT LIMITED TO DOORS, WINDOWS, PARTIAL WALL FOR NEW OPENING
- EXISTING VCT FLOOR TO BE REMOVED AND DISPOSED OF BY OTHERS

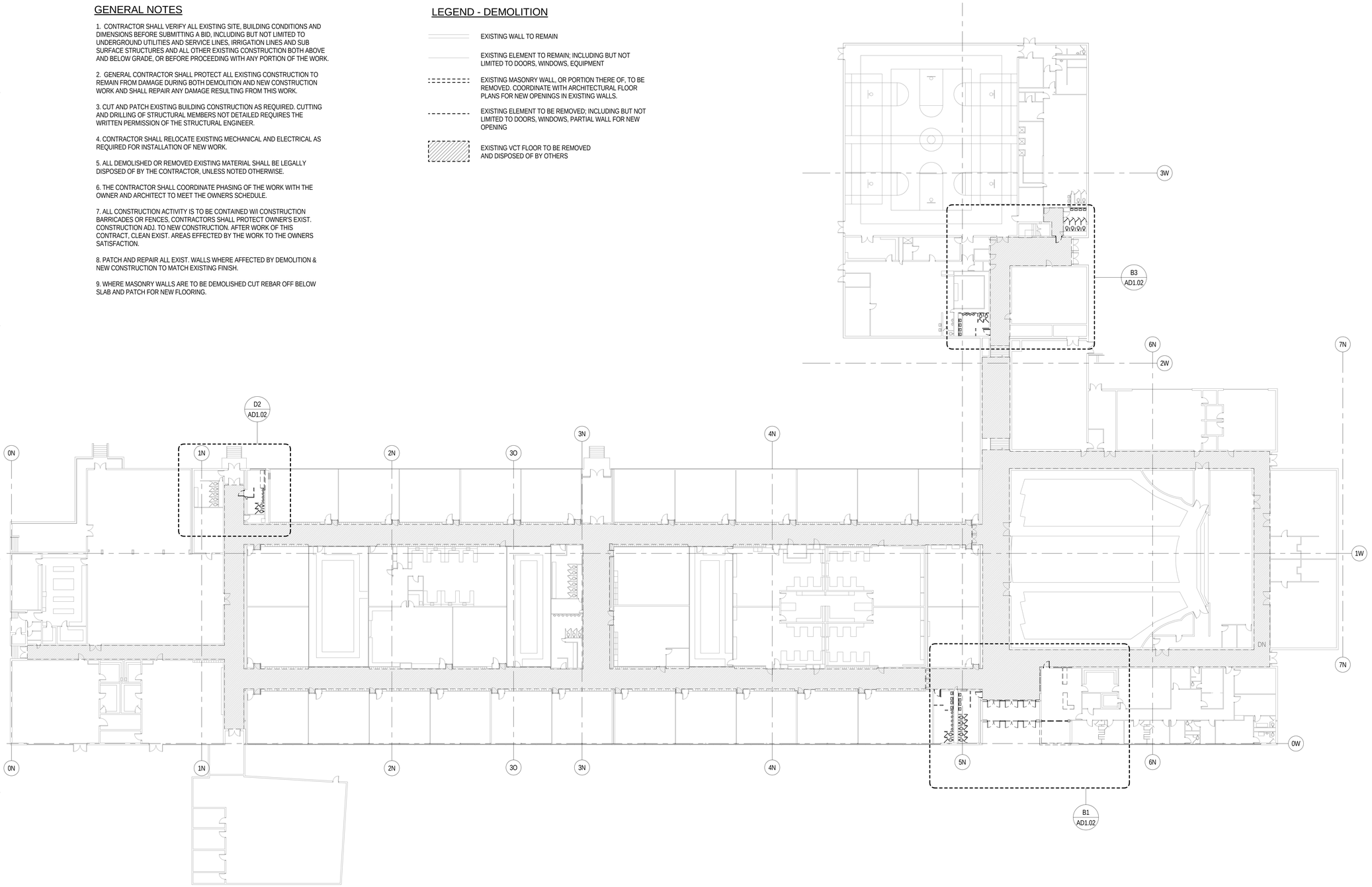

MAIN LEVEL DEMOLITION PLAN

0 10' - 8" 21' - 4" 42' - 8"

SCALE: 3/64" = 1'-0"

N

C:\Users\BenH\Documents\A15_2015505_OSD Highland JHS remodel_Central_BenH.rvt
4/13/2015 5:35:40 PM

MHTN ARCHITECTS

MHTN Architects, Inc.
420 East South Temple
Suite 100
Salt Lake City, Utah 84111
Telephone (801) 595-6700
Telefax (801) 595-6717
www.mhtn.com

OGDEN SCHOOL DISTRICT
Empowering Excellence Through Education

OGDEN SCHOOL DISTRICT
HIGHLAND JUNIOR HIGH SCHOOL REMODEL
325 GRAMERCY AVE.
OGDEN, UTAH 84404

©2011 MHTN ARCHITECTS, INC.

Drawings, written material, and design concepts shall not be used or reproduced in whole or part in any form or format without prior written consent of MHTN Architects, Inc. Drawings are intended for use in the given dimensions only. If not shown, verify correct dimensions with the Architect. Contractor shall check and verify all dimensions and conditions at job site.

SEAL

STATE OF UTAH
BRIAN DAVID PARKER
6294273-0301
5-NK-2350
LICENSED ARCHITECT

MHTN PROJECT NO. 2015505

DRAWN BY: BH CHECKED BY: RF & MP

ISSUED:

NO.	DATE	DESCRIPTION

CONTRACTOR TO VERIFY DRAWINGS IN FIELD USE REFLECT LAST REVISION DATE:

NO.	DATE	DESCRIPTION

SHEET NAME
MAIN LEVEL
DEMOLITION PLAN

CONSTRUCTION
DOCUMENTS
APRIL 15, 2015

SHEET NUMBER

AD1.01

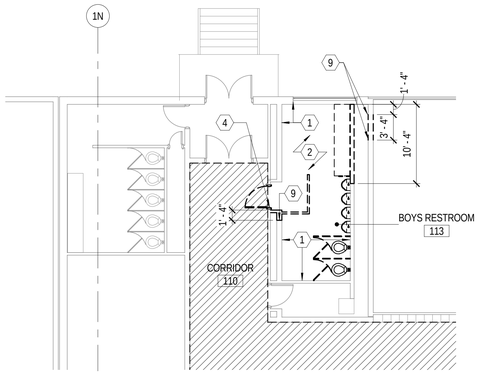

D2 BOYS RESTROOM DEMO PLAN

SCALE: 1/8" = 1'-0"

0 4' - 0" 8' - 0" 16' - 0"

N

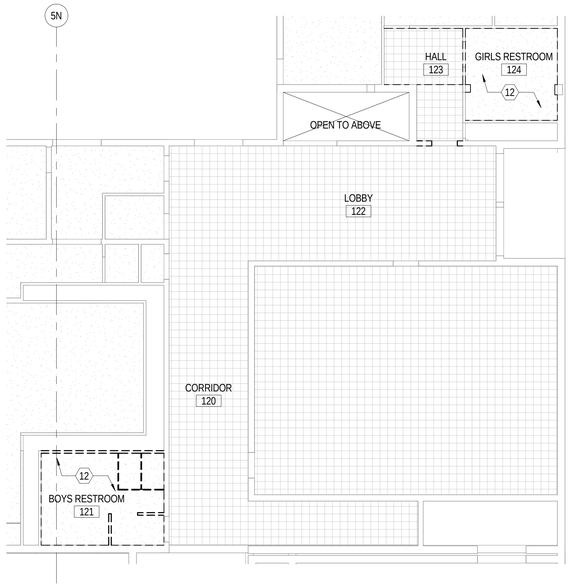

D3 GYM RESTROOMS REFLECTED CEILING DEMO PLAN

SCALE: 1/8" = 1'-0"

0 4' - 0" 8' - 0" 16' - 0"

N

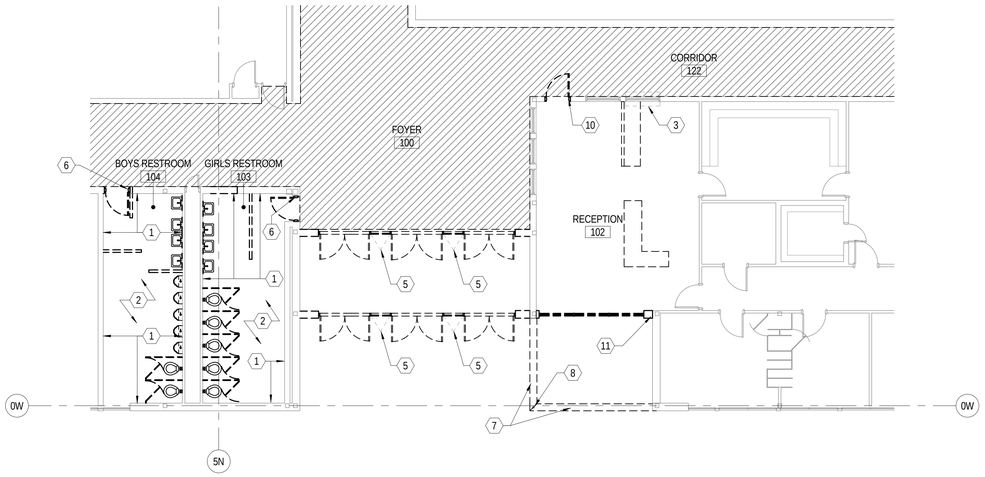

B1 ENTRY DEMO PLAN

SCALE: 1/8" = 1'-0"

0 4' - 0" 8' - 0" 16' - 0"

N

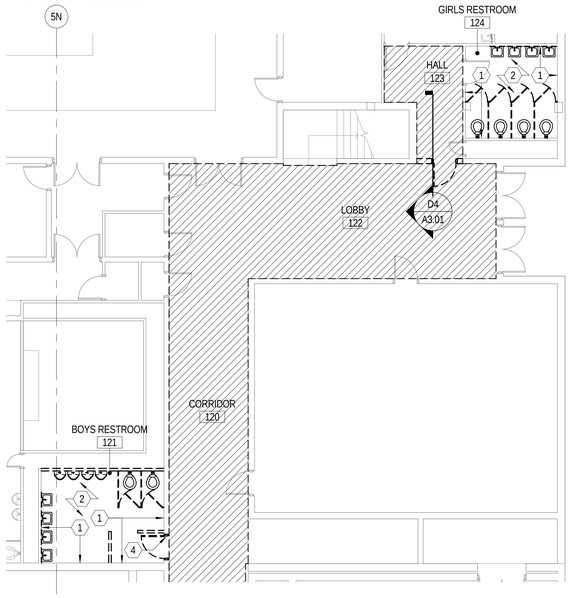

B3 GYM RESTROOM DEMO PLAN

SCALE: 1/8" = 1'-0"

0 4' - 0" 8' - 0" 16' - 0"

N

GENERAL NOTES

1. CONTRACTOR SHALL VERIFY ALL EXISTING SITE, BUILDING CONDITIONS AND DIMENSIONS BEFORE SUBMITTING A BID, INCLUDING BUT NOT LIMITED TO UNDERGROUND UTILITIES AND SERVICE LINES, IRRIGATION LINES AND SUB SURFACE STRUCTURES AND ALL OTHER EXISTING CONSTRUCTION BOTH ABOVE AND BELOW GRADE, OR BEFORE PROCEEDING WITH ANY PORTION OF THE WORK.

2. GENERAL CONTRACTOR SHALL PROTECT ALL EXISTING CONSTRUCTION TO REMAIN FROM DAMAGE DURING BOTH DEMOLITION AND NEW CONSTRUCTION WORK AND SHALL REPAIR ANY DAMAGE RESULTING FROM THIS WORK.

3. CUT AND PATCH EXISTING BUILDING CONSTRUCTION AS REQUIRED. CUTTING AND DRILLING OF STRUCTURAL MEMBERS NOT DETAILED REQUIRES THE WRITTEN PERMISSION OF THE STRUCTURAL ENGINEER.

4. CONTRACTOR SHALL RELOCATE EXISTING MECHANICAL AND ELECTRICAL AS REQUIRED FOR INSTALLATION OF NEW WORK.

5. ALL DEMOLISHED OR REMOVED EXISTING MATERIAL SHALL BE LEGALLY DISPOSED OF BY THE CONTRACTOR, UNLESS NOTED OTHERWISE.

6. THE CONTRACTOR SHALL COORDINATE PHASING OF THE WORK WITH THE OWNER AND ARCHITECT TO MEET THE OWNERS SCHEDULE.

7. ALL CONSTRUCTION ACTIVITY IS TO BE CONTAINED W/I CONSTRUCTION BARRICADES OR FENCES, CONTRACTORS SHALL PROTECT OWNER'S EXIST. CONSTRUCTION ADJ. TO NEW CONSTRUCTION. AFTER WORK OF THIS CONTRACT, CLEAN EXIST. AREAS EFFECTED BY THE WORK TO THE OWNERS SATISFACTION.

8. PATCH AND REPAIR ALL EXIST. WALLS WHERE AFFECTED BY DEMOLITION & NEW CONSTRUCTION TO MATCH EXISTING FINISH.

9. WHERE MASONRY WALLS ARE TO BE DEMOLISHED CUT REBAR OFF BELOW SLAB AND PATCH FOR NEW FLOORING.

KEYNOTES - DEMOLITION

1. REMOVE WALL TILE AND PLASTER AND PREP FOR NEW FINISH
2. REMOVE FLOOR TILE AND THICKSET TOPPING, PREP FOR NEW FINISH
3. REMOVE EXISTING TRANSACTION COUNTER AND PREP FOR NEW TRANSACTION COUNTER TO BE INSTALLED
4. REMOVE DOOR , DOOR FRAME TO REMAIN. PREP DOOR FRAME FOR NEW DOOR WITH NEW SWING
5. REMOVE CONCRETE BASE AND CONCRETE CAP
6. REMOVE DOOR AND FRAME
7. REMOVE 2' TALL MASONRY PLANTER WALL W/ CONCRETE CAP AND ASSOCIATED FOOTINGS AND FOUNDATIONS
8. REMOVE 3" STEEL PIPE COLUMN, SUPPORT ROOF ABOVE UNTIL NEW COLUMN IS INSTALLED
9. SAWCUT OPENING IN EXISTING CONCRETE WALL - DO NOT OVERCUT
10. REMOVE DOOR , DOOR FRAME TO REMAIN. PREP DOOR FRAME FOR NEW DOOR WITH NEW DOOR HARDWARE
11. MASONRY WALL TO BE DEMOLISHED, CLEAN BRICK AND REUSE TO FINISH OUT NEW OPENING
12. EXISTING SUSPENDED CEILING TO BE REMOVED

LEGEND - DEMOLITION

- EXISTING WALL TO REMAIN
- EXISTING ELEMENT TO REMAIN; INCLUDING BUT NOT LIMITED TO DOORS, WINDOWS, EQUIPMENT
- EXISTING MASONRY WALL, OR PORTION THERE OF, TO BE REMOVED. COORDINATE WITH ARCHITECTURAL FLOOR PLANS FOR NEW OPENINGS IN EXISTING WALLS.
- EXISTING ELEMENT TO BE REMOVED; INCLUDING BUT NOT LIMITED TO DOORS, WINDOWS, PARTIAL WALL FOR NEW OPENING
- EXISTING VCT FLOOR TO BE REMOVED AND DISPOSED OF BY OTHERS

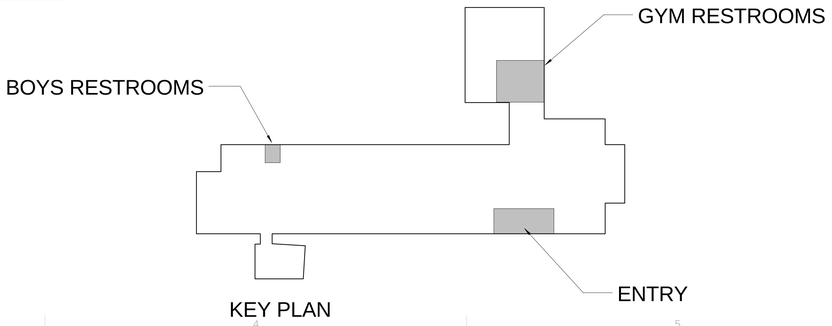

KEY PLAN

MHTN ARCHITECTS

MHTN Architects, Inc.
420 East South Temple
Suite 100
Salt Lake City, Utah 84111
Telephone (801) 595-6700
Telefax (801) 595-6717
www.mhtn.com

OGDEN SCHOOL DISTRICT
Empowering Excellence Through Education

OGDEN SCHOOL DISTRICT

HIGHLAND JUNIOR HIGH SCHOOL REMODEL

325 GRAMERCY AVE.
OGDEN, UTAH 84404

©2011 MHTN ARCHITECTS, INC.

Drawings, written material, and design concepts shall not be used or reproduced in whole or part in any form or format without prior written consent of MHTN Architects, Inc. Do not scale drawings. Use given dimensions only. If not shown, verify correct dimensions with the Architect. Contractor shall check and verify all dimensions and conditions at job site.

SEAL

STATE OF UTAH
BRIAN DAVID PARKER
6294273-0301
15 MAR 2015
LICENSED ARCHITECT

MHTN PROJECT NO. 2015505

DRAWN BY: Author CHECKED BY: Checker

ISSUED:

NO.	DATE	DESCRIPTION

CONTRACTOR TO VERIFY DRAWINGS IN FIELD USE REFLECT LAST REVISION DATE.

NO.	DATE	DESCRIPTION

SHEET NAME

PARTIAL DEMO PLANS

CONSTRUCTION DOCUMENTS
APRIL 15, 2015

SHEET NUMBER

AD1.02

C:\Users\BenH\Documents\A15_2015595_OSD Highland JHS remodel_Central_BenH.rvt
4/13/2015 12:48:36 PM

GENERAL NOTES

1. CONTRACTOR SHALL VERIFY ALL EXISTING SITE AND BUILDING CONDITIONS INCLUDING BUT NOT LIMITED TO UNDERGROUND UTILITIES AND SERVICE LINES, IRRIGATION LINES AND SUB SURFACE STRUCTURES AND ALL OTHER EXISTING CONSTRUCTION BOTH ABOVE AND BELOW GRADE.

2. CONTRACTOR SHALL PROTECT ALL EXISTING CONSTRUCTION TO REMAIN FROM DAMAGE DURING BOTH DEMOLITION AND NEW CONSTRUCTION WORK AND SHALL REPAIR ANY DAMAGE RESULTING FROM THIS WORK.

3. CONTRACTOR TO BRING TO ATTENTION OF ARCHITECT ANY CONFLICT IN CONTRACT DOCUMENTS. WHERE CONFLICT OCCURS THE MOST STRINGENT REQUIREMENTS SHALL APPLY.

4. SEALANT REQUIRED BETWEEN ALL DISSIMILAR MATERIAL AND AROUND ALL FRAMES, OPENINGS & PENETRATION. COORDINATE COLOR WITH ARCHITECT PRIOR TO INSTALLATION.

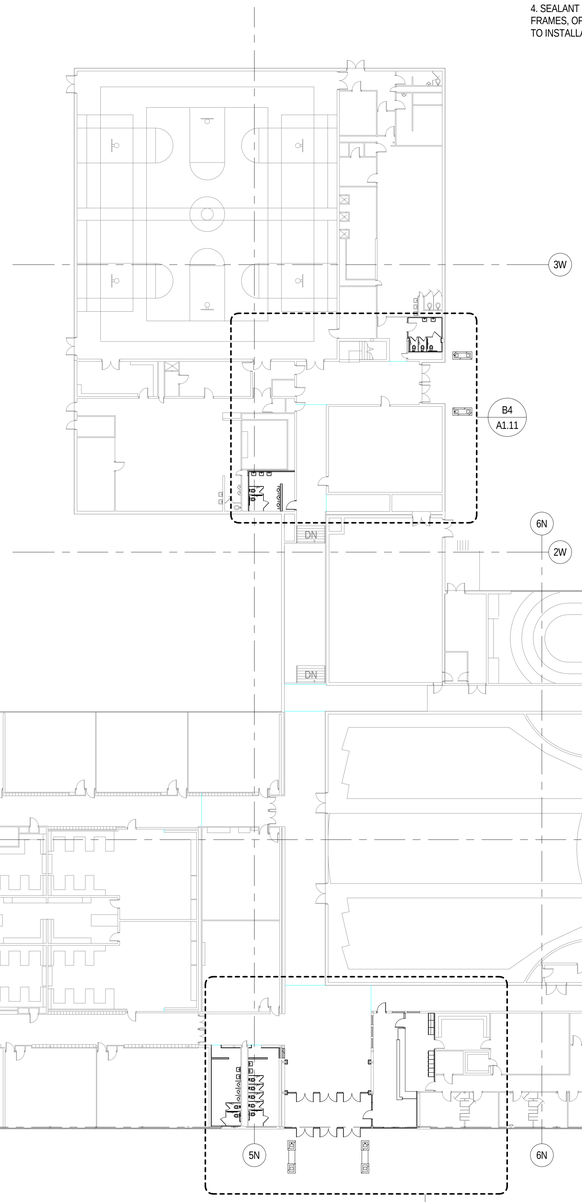

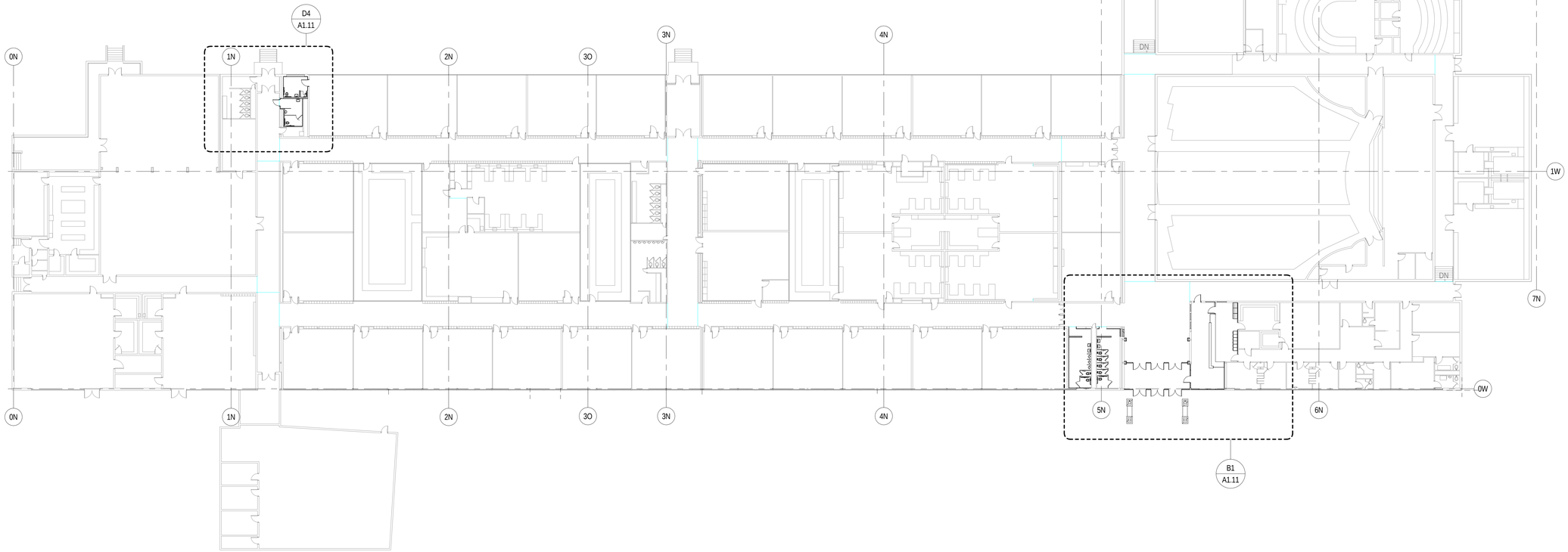

LEVEL 1 FLOOR PLAN

0 10' - 8" 21' - 4" 42' - 8"

SCALE: 3/64" = 1'-0"

N

C:\Users\BenH\Documents\A15_2015505_OSD Highland JrHS remodel_Central_BenH.rvt
4/13/2015 12:47:51 PM

MHTN ARCHITECTS

MHTN Architects, Inc.
420 East South Temple
Suite 100
Salt Lake City, Utah 84111
Telephone (801) 595-6700
Telefax (801) 595-6717
www.mhtn.com

OGDEN SCHOOL DISTRICT
Empowering Excellence Through Education

OGDEN SCHOOL DISTRICT

HIGHLAND JUNIOR HIGH SCHOOL REMODEL

325 GRAMERCY AVE.
OGDEN, UTAH 84404

©2011 MHTN ARCHITECTS, INC.

Drawings, written material, and design concepts shall not be used or reproduced in whole or part in any form or format without prior written consent of MHTN Architects, Inc. Do not scale drawings. Use given dimensions only. If not shown, verify correct dimensions with the Architect. Contractor shall check and verify all dimensions and conditions at job site.

SEAL

STATE OF UTAH
BRIAN DAVID PARKER
6294273-0301
LICENSED ARCHITECT

MHTN PROJECT NO. 2015505

DRAWN BY: Author CHECKED BY: Checker

ISSUED:

NO.	DATE	DESCRIPTION

CONTRACTOR TO VERIFY DRAWINGS IN FIELD USE REFLECT LAST REVISION DATE.

NO.	DATE	DESCRIPTION

SHEET NAME

MAIN LEVEL OVERALL PLAN

CONSTRUCTION DOCUMENTS
APRIL 15, 2015

SHEET NUMBER

A1.10

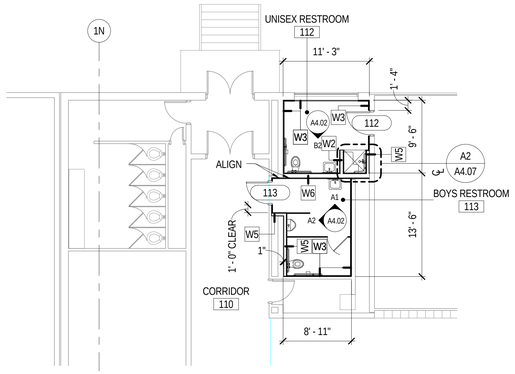

D4 BOYS RESTROOM FLOOR PLAN

SCALE: 1/8" = 1'-0"

0 2' - 0" 4' - 0" 8' - 0"

N

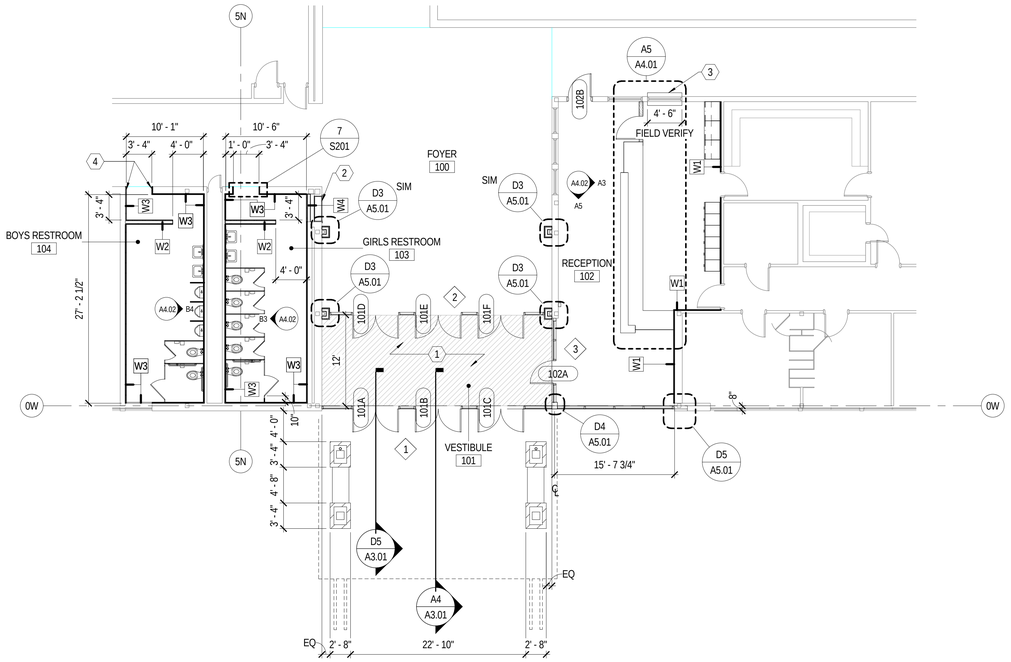

B1 ENTRY FLOOR PLAN

SCALE: 1/8" = 1'-0"

0 2' - 0" 4' - 0" 8' - 0"

N

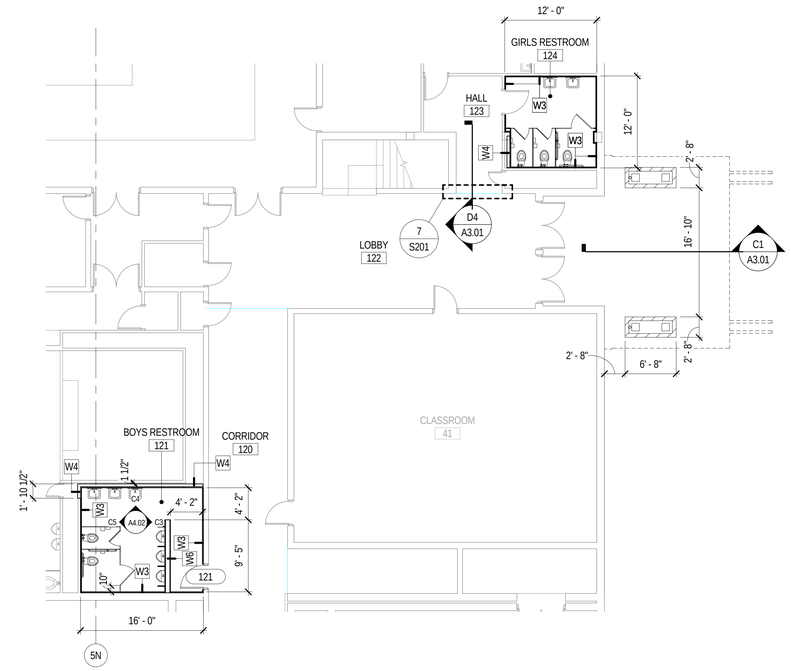

B4 GYM RESTROOMS FLOOR PLAN

SCALE: 1/8" = 1'-0"

0 2' - 0" 4' - 0" 8' - 0"

N

GENERAL NOTES

1. CONTRACTOR SHALL VERIFY ALL EXISTING SITE AND BUILDING CONDITIONS INCLUDING BUT NOT LIMITED TO UNDERGROUND UTILITIES AND SERVICE LINES, IRRIGATION LINES AND SUB SURFACE STRUCTURES AND ALL OTHER EXISTING CONSTRUCTION BOTH ABOVE AND BELOW GRADE.

2. CONTRACTOR SHALL PROTECT ALL EXISTING CONSTRUCTION TO REMAIN FROM DAMAGE DURING BOTH DEMOLITION AND NEW CONSTRUCTION WORK AND SHALL REPAIR ANY DAMAGE RESULTING FROM THIS WORK.

3. CONTRACTOR TO BRING TO ATTENTION OF ARCHITECT ANY CONFLICT IN CONTRACT DOCUMENTS. WHERE CONFLICT OCCURS THE MOST STRINGENT REQUIREMENTS SHALL APPLY.

4. SEALANT REQUIRED BETWEEN ALL DISSIMILAR MATERIAL AND AROUND ALL FRAMES, OPENINGS & PENETRATION. COORDINATE COLOR WITH ARCHITECT PRIOR TO INSTALLATION.

KEYNOTES - PLAN

1. 4" CONCRETE SLAB OVER 4" GRAVEL BASE
2. DISPLAY CASE, SEE D4/A4.01
3. 1-1/2" SOLID SURFACE TRANSACTION COUNTER
4. FINISH OPENING WITH PAINTED BENT PLATE, SIMILAR TO 7/S201

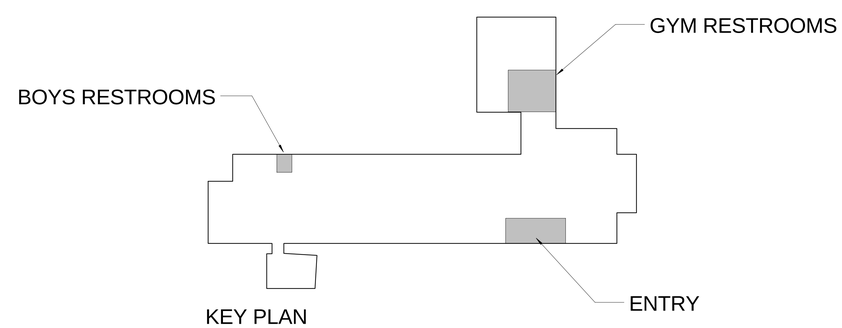

KEY PLAN

MHTN ARCHITECTS
MHTN Architects, Inc.
420 East South Temple
Suite 100
Salt Lake City, Utah 84111
Telephone (801) 595-6700
Telefax (801) 595-6717
www.mhtn.com

OGDEN SCHOOL DISTRICT
Empowering Excellence Through Education

OGDEN SCHOOL DISTRICT
HIGHLAND JUNIOR HIGH SCHOOL REMODEL
325 GRAMERCY AVE.
OGDEN, UTAH 84404

©2011 MHTN ARCHITECTS, INC.
Drawings, written material, and design concepts shall not be used or reproduced in whole or part in any form or format without prior written consent of MHTN Architects, Inc. Use of these documents is intended for given dimensions only. If not the same, contact Architect. Contractor shall check and verify all dimensions and conditions at job site.

SEAL

STATE OF UTAH
BRIAN DAVID PARKER
6294273-0301
5-NK-2352
LICENSED ARCHITECT

MHTN PROJECT NO. 2015505

DRAWN BY: Author CHECKED BY: Checker

ISSUED:

NO.	DATE	DESCRIPTION

CONTRACTOR TO VERIFY DRAWINGS IN FIELD USE REFLECT LAST REVISION DATE:

NO.	DATE	DESCRIPTION

SHEET NAME
MAIN LEVEL PARTIAL PLANS

CONSTRUCTION DOCUMENTS
APRIL 15, 2015

SHEET NUMBER
A1.11

C:\Users\BenH\Documents\A15_2015505_OSD Highland_JHS remodel_Central_BenH.rvt
4/13/2015 12:47:52 PM

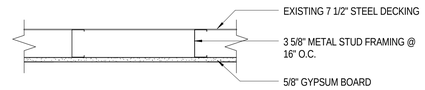

E3 DETAIL

SCALE: 1 1/2" = 1'-0"

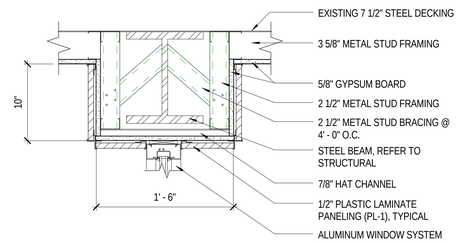

D3 DETAIL

SCALE: 1 1/2" = 1'-0"

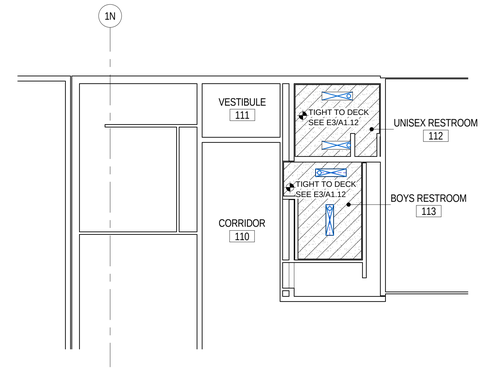

D4 BOYS RESTROOM REFLECTED CEILING PLAN

SCALE: 1/8" = 1'-0"

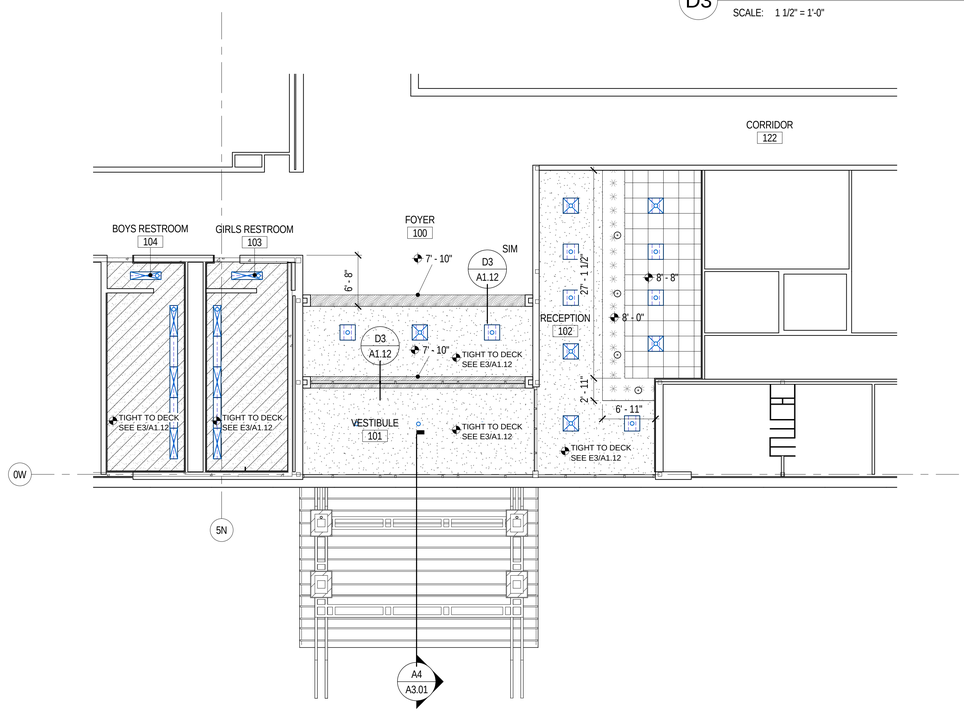

B1 ENTRY REFLECTED CEILING PLAN

SCALE: 1/8" = 1'-0"

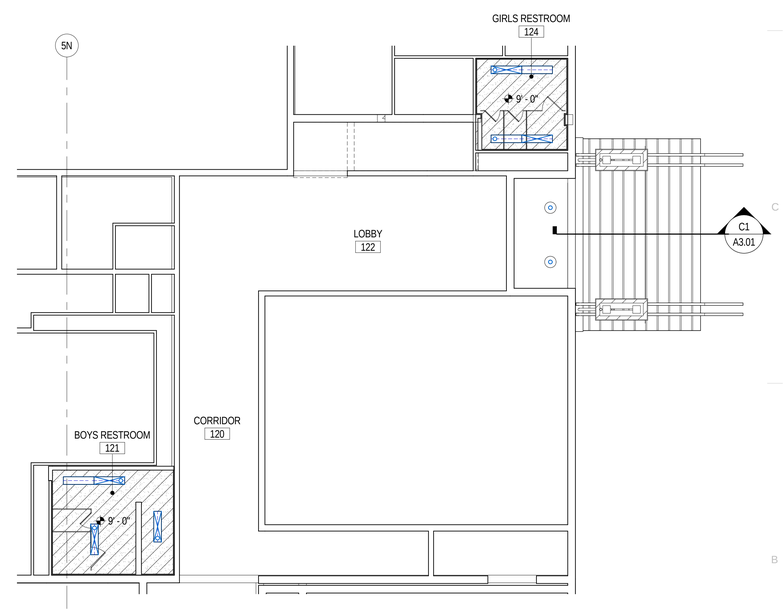

B4 GYM RESTROOMS REFLECTED CEILING PLAN

SCALE: 1/8" = 1'-0"

LEGEND - REFLECTED CEILING PLANS

- C1 - GYPSUM CEILING
- C2 - EPOXY PAINTED GYPSUM CEILING, SEE FINISH SCHEDULE
- C3 - 2' X 2' ACOUSTICAL CEILING TILE

GENERAL NOTES

1. REFER TO EXTERIOR ELEVATIONS AND DETAILS FOR GRILLES AND LOUVERS OF MECH AND FIREPLACE EXHAUST DUCTING (TYP.)
2. REFER TO INTERIOR ELEVATIONS FOR CHANGES IN PLANES , SOFFITS , LIGHTING INSTALLATION HEIGHTS AND OTHER REFERENCES.
3. NOT ALL KEYNOTES APPLY TO THIS SHEET.

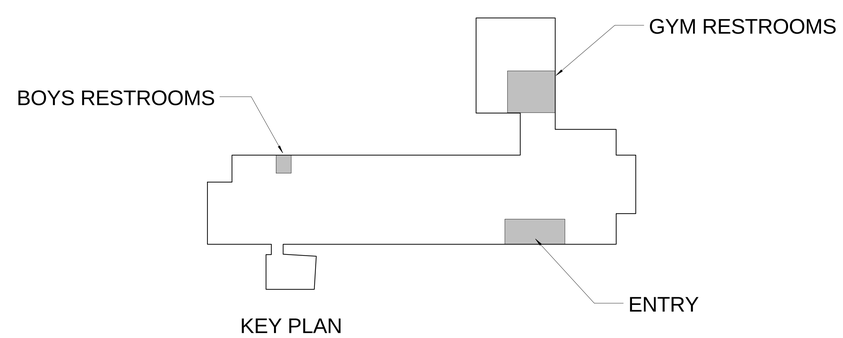

KEY PLAN

MHTN ARCHITECTS
MHTN Architects, Inc.
420 East South Temple
Suite 100
Salt Lake City, Utah 84111
Telephone (801) 595-6700
Telefax (801) 595-6717
www.mhtn.com

OGDEN SCHOOL DISTRICT
Empowering Excellence Through Education

OGDEN SCHOOL DISTRICT
HIGHLAND JUNIOR HIGH SCHOOL REMODEL
325 GRAMERCY AVE.
OGDEN, UTAH 84404

©2011 MHTN ARCHITECTS, INC.
Drawings, written material, and design concepts shall not be used or reproduced in whole or part in any form or format without prior written consent of MHTN Architects, Inc. Drawings are intended for given dimensions only. If not shown, verify correct dimensions with the Architect. Contractor shall check and verify all dimensions and conditions at job site.

SEAL

STATE OF UTAH
BRIAN DAVID PARKER
6294273-0301
S NJK-23502
LICENSED ARCHITECT

MHTN PROJECT NO. 2015505

DRAWN BY: Author CHECKED BY: Checker

ISSUED:

NO.	DATE	DESCRIPTION

CONTRACTOR TO VERIFY DRAWINGS IN FIELD USE REFLECT LAST REVISION DATE:

NO.	DATE	DESCRIPTION

SHEET NAME
REFLECTED CEILING PLANS

CONSTRUCTION DOCUMENTS
APRIL 15, 2015

SHEET NUMBER
A1.12

C:\Users\BenH\Documents\A15_2015505_OSD Highland JHS remodel_Central_BenH.rvt
4/13/2015 12:47:53 PM

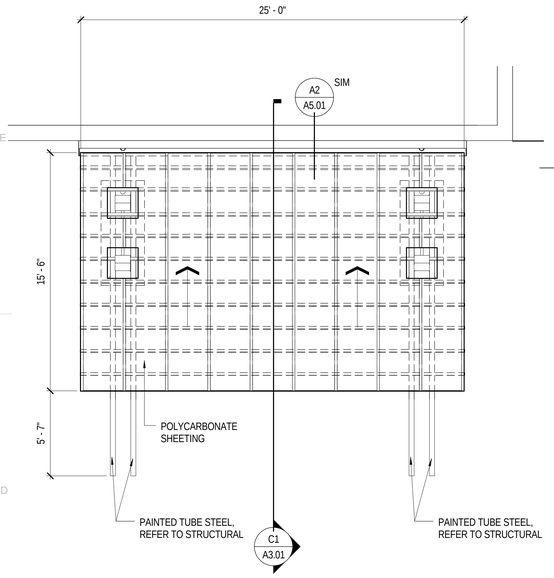

D1 GYM CANOPY ROOF PLAN

SCALE: 1/4" = 1'-0"

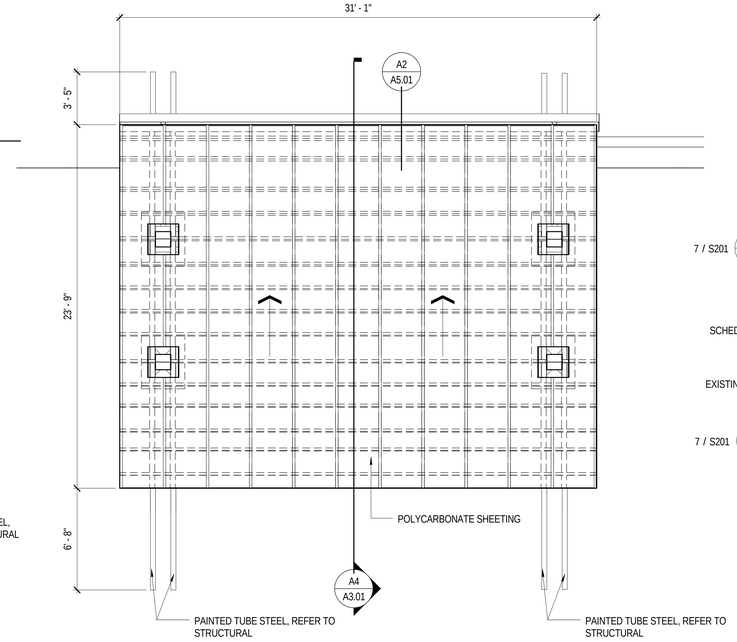

D2 MAIN ENTRY CANOPY ROOF PLAN

SCALE: 1/4" = 1'-0"

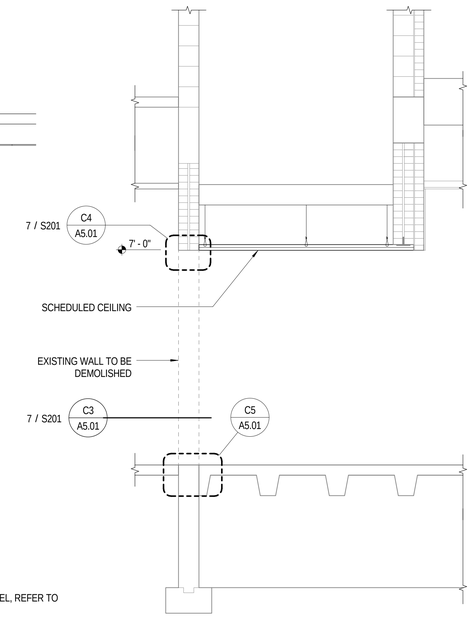

D4 HALL SECTION

SCALE: 1/2" = 1'-0"

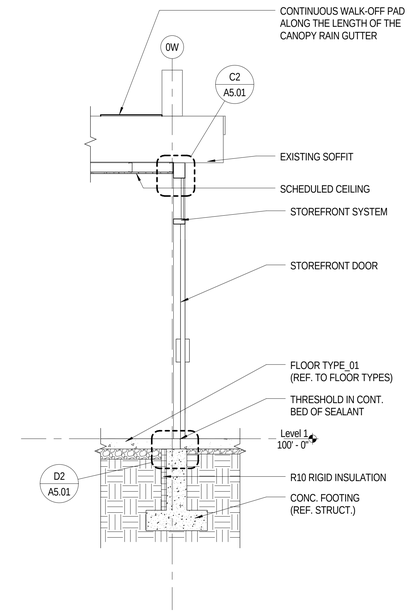

D5 ENTRY WALL SECTION

SCALE: 1/2" = 1'-0"

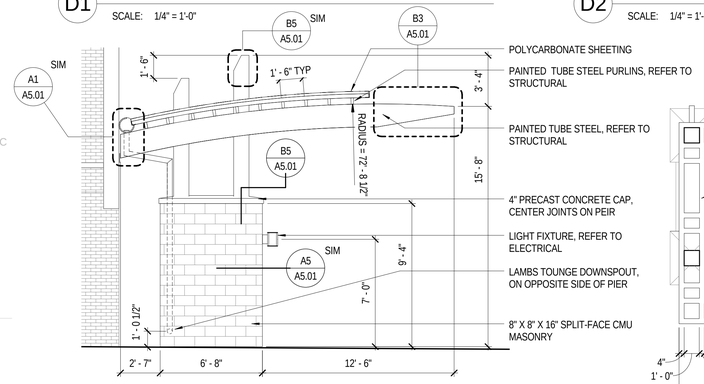

C1 GYM CANOPY SECTION

SCALE: 1/4" = 1'-0"

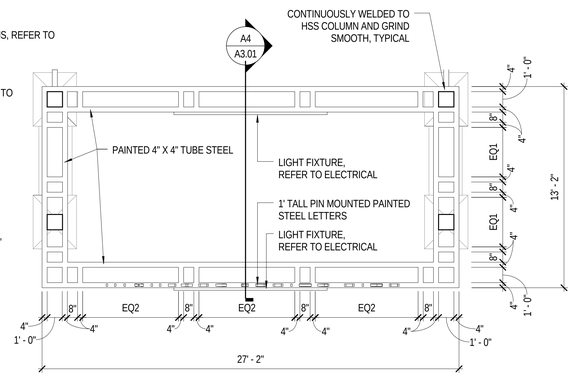

C2 ENTRY CANOPY SIGNAGE

SCALE: 1/4" = 1'-0"

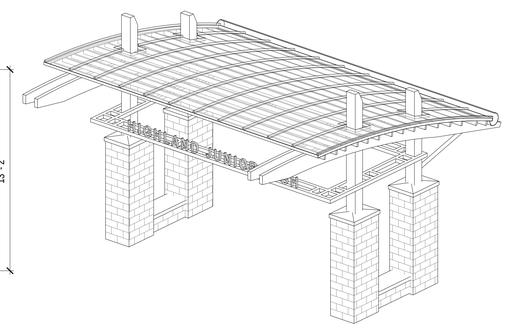

C4 MAIN ENTRY CANOPY AXONOMETRIC

SCALE:

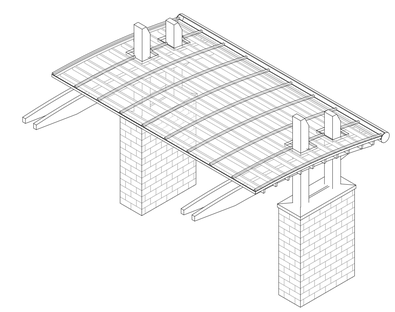

C5 GYM ENTRY CANOPY AXONOMETRIC

SCALE:

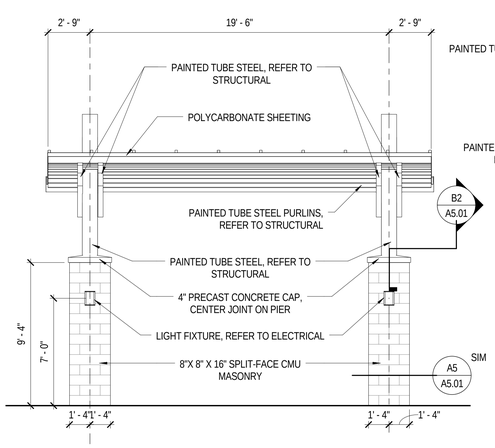

A1 GYM CANOPY ELEVATION

SCALE: 1/4" = 1'-0"

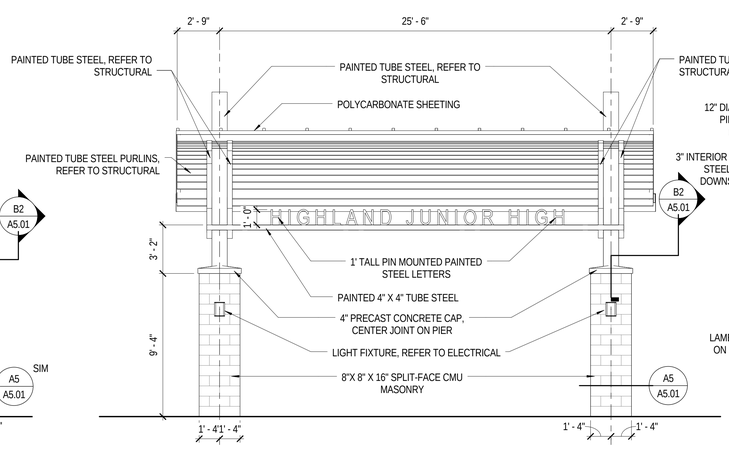

A2 MAIN ENTRY CANOPY

SCALE: 1/4" = 1'-0"

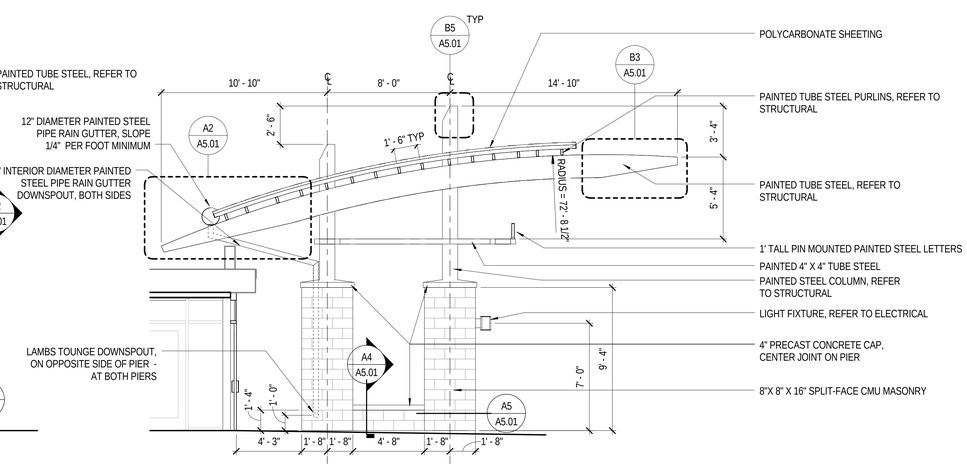

A4 MAIN CANOPY SECTION

SCALE: 1/4" = 1'-0"

C:\Users\BenH\Documents\A15_2015505_OSD Highland JHS remodel_Central_BenH.rvt
4/13/2015 12:47:56 PM

MHTN ARCHITECTS

MHTN Architects, Inc.
420 East South Temple
Suite 100
Salt Lake City, Utah 84111
Telephone (801) 595-6700
Telefax (801) 595-6717
www.mhtn.com

OGDEN SCHOOL DISTRICT
Empowering Excellence Through Education

OGDEN SCHOOL DISTRICT
HIGHLAND JUNIOR HIGH SCHOOL REMODEL
325 GRAMERCY AVE.
OGDEN, UTAH 84404

©2011 MHTN ARCHITECTS, INC.
Drawings, written material, and design concepts shall not be used or reproduced in whole or part in any form or format without prior written consent of MHTN Architects, Inc. Do not scale drawings. Use given dimensions only. Verify all dimensions and conditions before proceeding. Contractor shall check and verify all dimensions and conditions at job site.

SEAL

STATE OF UTAH
BRIAN DAVID PARKER
6294273-0301
05 MAY 2015
LICENSED ARCHITECT

MHTN PROJECT NO. 2015505

DRAWN BY: Author CHECKED BY: Checker

ISSUED:

NO.	DATE	DESCRIPTION

CONTRACTOR TO VERIFY DRAWINGS IN FIELD USE REFLECT LAST REVISION DATE:

NO.	DATE	DESCRIPTION

SHEET NAME
CANOPIES

CONSTRUCTION DOCUMENTS
APRIL 15, 2015

SHEET NUMBER
A3.01

		FLOOR				BASE		NORTH WALL						EAST WALL						SOUTH WALL						WEST WALL						CEILING				
RM #	ROOM NAME	F1 WALK-OFF CARPET	F2 POLISHED CONCRETE	F3 CARPET TILE	F4 MOSAIC PORCELAIN TILE	B1 RUBBER BASE	B2 TILE COVE	W1 PLASTIC LAMINATE WALL SYSTEM	W2 CERAMIC WALL TILE	W3 PORCELAIN WALL TILE	W4 PORCELAIN WALL TILE	W5 PAINTED GYPSUM BOARD	W6 VINYL WALL COVERING	W1 PLASTIC LAMINATE WALL SYSTEM	W2 CERAMIC WALL TILE	W3 PORCELAIN WALL TILE	W4 PORCELAIN WALL TILE	W5 PAINTED GYPSUM BOARD	W6 VINYL WALL COVERING	W1 PLASTIC LAMINATE WALL SYSTEM	W2 CERAMIC WALL TILE	W3 PORCELAIN WALL TILE	W4 PORCELAIN WALL TILE	W5 PAINTED GYPSUM BOARD	W6 VINYL WALL COVERING	W1 PLASTIC LAMINATE WALL SYSTEM	W2 CERAMIC WALL TILE	W3 PORCELAIN WALL TILE	W4 PORCELAIN WALL TILE	W5 PAINTED GYPSUM BOARD	W6 VINYL WALL COVERING	C1 2X2 ACOUSTIC TILE SYSTEM	C2 PAINTED GYP. BOARD	C3 EPOXY PAINTED GYP. CEILING	REMARKS	RM #
100	FOYER	F1	F2			B1		W1												W1													C2			100
101	VESTIBULE	F1				B1																											C2		CLEAN EXISTING MASONRY WALL	101
102	RECEPTION			F3		B1		W1					W6																		W6	C1	C2		CLEAN EXISTING MASONTY WALLS	102
103	GIRLS RESTROOM				F4		B2		W2	W3					W2	W3	W4				W2	W3					W2	W3						C3		103
104	BOYS RESTROOM				F4		B2		W2	W3					W2	W3	W4				W2	W3					W2	W3						C3		104
105	CORRIDOR		F2																																	105
106	CORRIDOR		F2																																	106
107	CORRIDOR		F2																																	107
108	CORRIDOR		F2																																	108
109	CORRIDOR		F2																																	109
110	CORRIDOR		F2																																	110
111	VESTIBULE	F1																																		111
112	UNISEX RESTROOM				F4		B2		W2	W3					W2	W3					W2	W3					W2	W3						C3		112
113	BOYS RESTROOM				F4		B2			W3	W4				W2	W3					W2	W3					W2	W3						C3		113
114	CORRIDOR		F2																																	114
115	VESTIBULE	F1																																		115
116	CORRIDOR																																			116
117	CORRIDOR																																			117
118	CORRIDOR																																			118
119	CORRIDOR	F1																																		119
120	CORRIDOR		F2																																	120
120	CORRIDOR		F2																																	120
121	BOYS RESTROOM				F4		B2		W2	W3	W4				W2	W3					W2	W3					W2	W3						C3		121
121	CORRIDOR		F2																																	121
122	LOBBY		F2																																	122
122	CORRIDOR		F2																																	122
123	HALL		F2																																	123
124	GIRLS RESTROOM				F4		B2		W2	W3	W4				W2	W3					W2	W3					W2	W3						C3		124

FINISH SCHEDULE

GENERAL NOTES

1. PROVIDE STUD WALL BACKING FOR ALL SURFACE MOUNTED MILLWORK AND EQUIPMENT, INCLUDING ALL OWNER PROVIDED EQUIPMENT.

2. PROVIDE STUD BACKING FOR ALL WALL HUNG BRACKETS & WALL HUNG ACCESSORIES.

3. ALL PLASTIC LAMINATE AND SOLID SURFACE SELECTIONS ARE PRELIMINARY AND REQUIRE OWNER APPROVAL. LAMINATES AND SOLID SURFACES LISTED IN THE FINISH LEGEND ARE BASIS OF DESIGN AND ARE FOR BIDDING PURPOSES ONLY.

   - PL-1 NEVAMAR PLASTIC LAMINATE: SANTA ROSA PLUM WZ2001T
   - PL-2 NEVAMAR PLASTIC LAMINATE: LEGENDARY TEAK WTOOO4T
   - SS-1 SAMSUNG STARON: SANDED CREAM SM421
   - SS-2 3 FORM: FIZZ LAWN

4. CABINET VERTICAL SURFACE TO BE PL-1 UNLESS NOTED OTHERWISE

5. COUNTERTOP FINISH TO BE SS-1 UNLESS NOTED OTHERWISE. COUNTERTOPS INDICATED ARE OF SOLID SURFACE CONSTRUCTION UNLESS NOTED OTHERWISE.

6. BASE CABINET HEIGHTS ARE TYPICAL. SEE INTERIOR ELEVATIONS FOR NON TYPICAL HEIGHTS.

8. SEE INTERIOR ELEVATIONS FOR LOCATIONS OF BACKSPLASH.

KEYNOTES - MILLWORK

1. 1-1/2" SOLID SURFACE COUNTER TOP
2. 3/8" RESIN PANEL (SS2) WITH STAINLESS STEEL FASTENERS
3. 1/2" PLASTIC PLAMINATE PANEL (PL-1)
4. 1/2" PLASTIC PLAMINATE PANEL (PL-2)
5. 1/2" PLASTIC PLAMINATE WALL CAP (PL-1) W/ ALUMINUM REVEAL SIM. TO C4/A4.01
6. 1-1/2" MILLWORK DOOR
7. TACKABLE SURFACE
8. ADJUSTABLE SHELF
9. 1-1/2" PLASTIC LAMINATE ON MDF SUBSTRATE COUNTERTOP SUPPORT
10. GROMMETS AS REQUIRES, LOCATIONS TO BE VERIFIED IN THE FIELD
11. LIGHTING CONTROLER, REFER TO ELECTRICAL
12. PLASTIC LAMINATE HINGED DOOR WITH LOCKS
13. PLASTIC LAMINATE FILLER PANEL

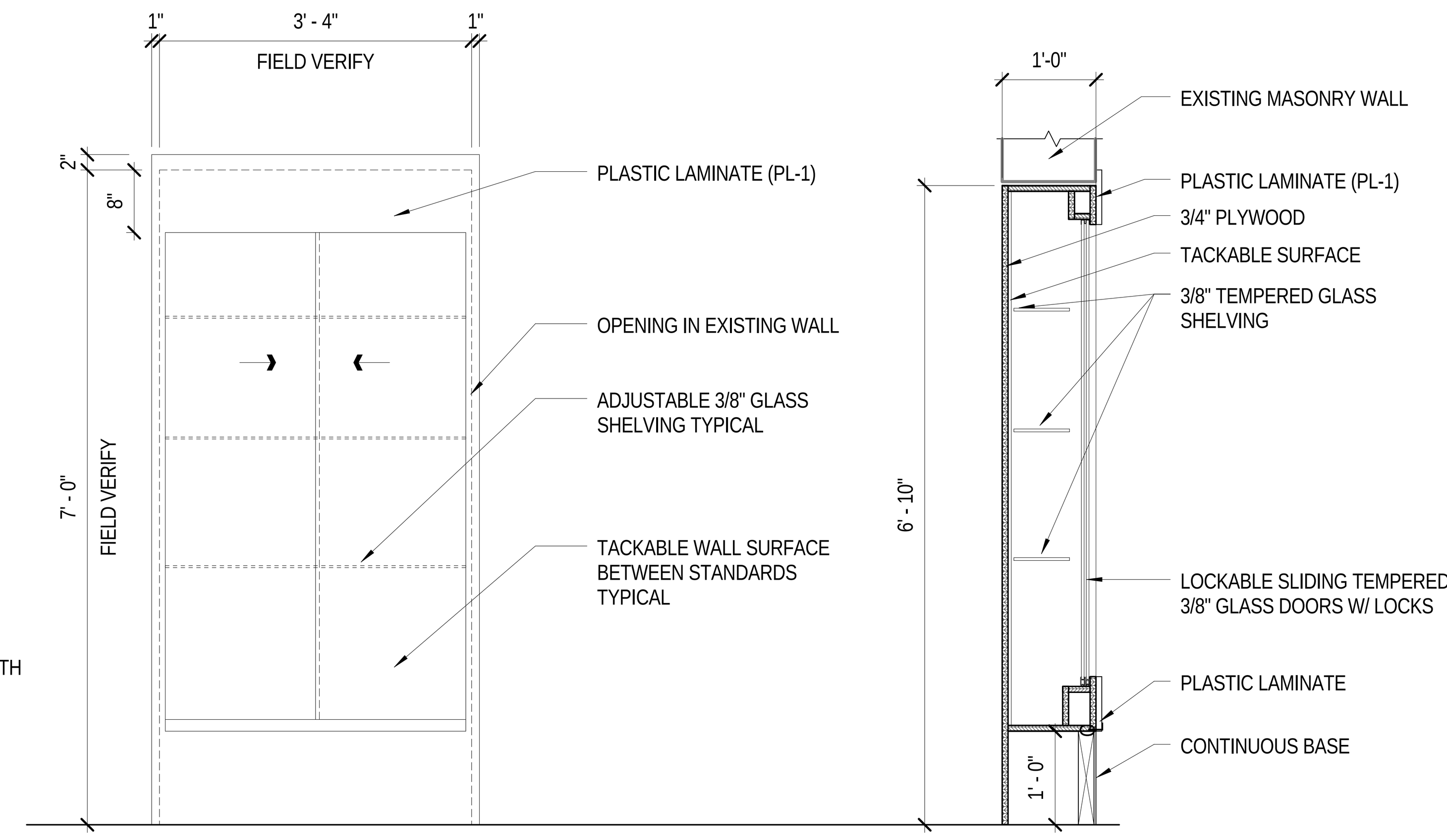

D4 DISPLAY CASE

SCALE: 3/4" = 1'-0"

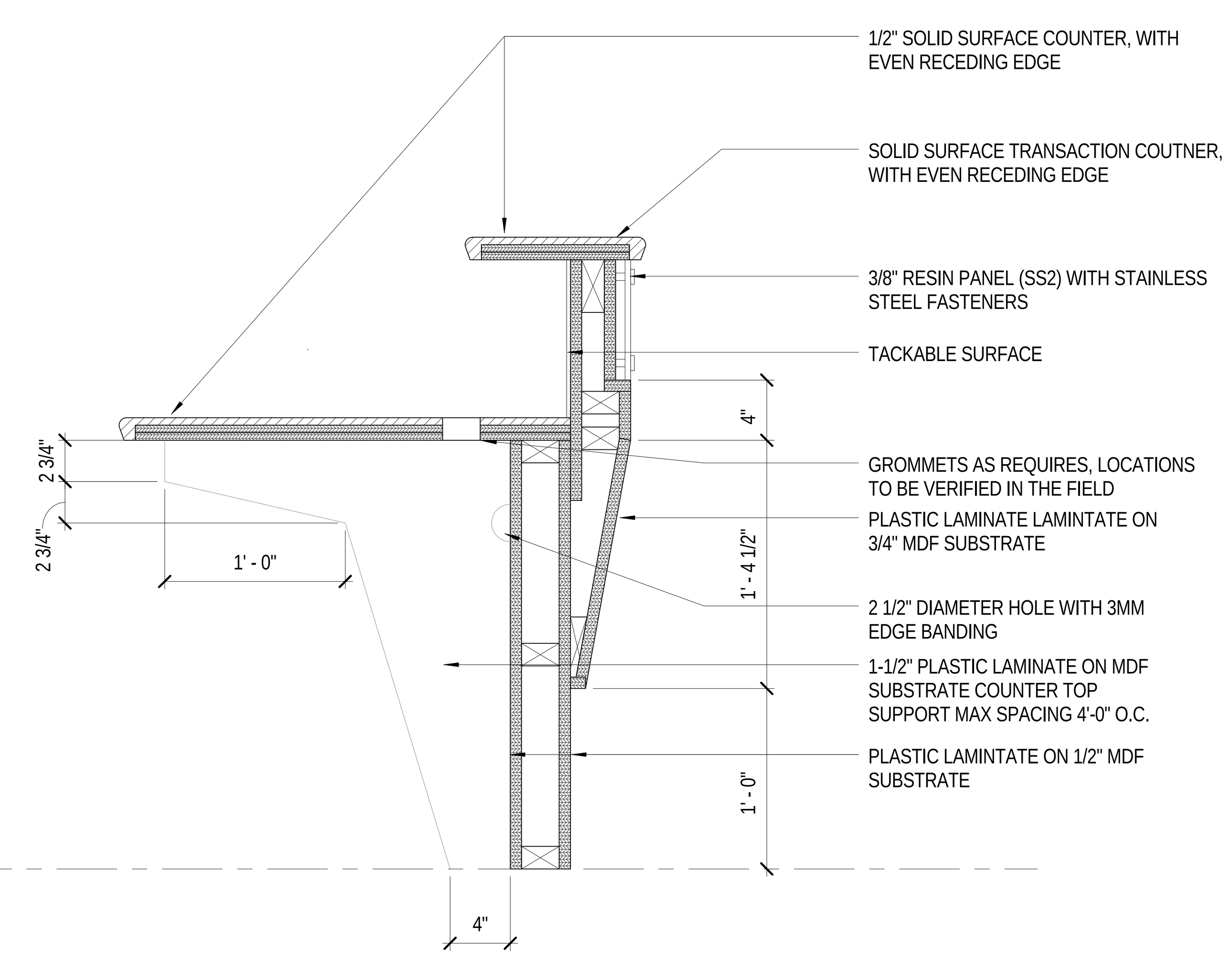

C1 RECEPTION DESK DETAIL

SCALE: 1 1/2" = 1'-0"

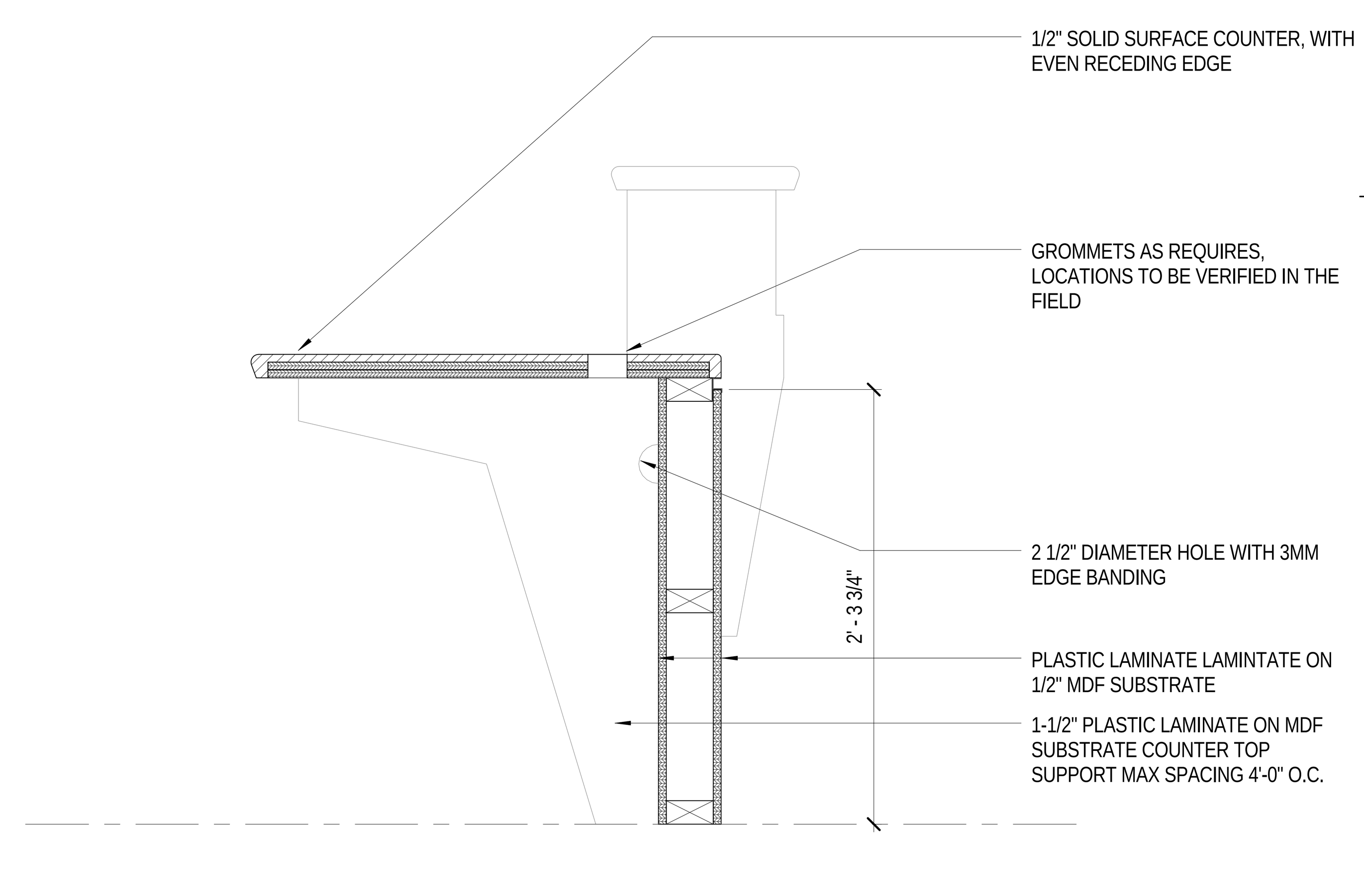

C3 RECEPTION DESK DETAIL

SCALE: 1 1/2" = 1'-0"

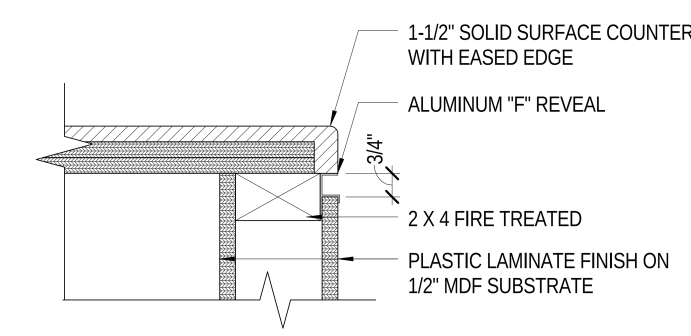

C4 RECEPTION DESK DETAIL

SCALE: 3" = 1'-0"

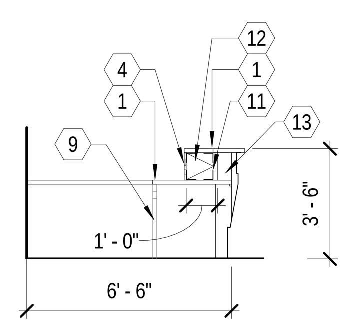

B3 RECEPTION DESK E

SCALE: 1/4" = 1'-0"

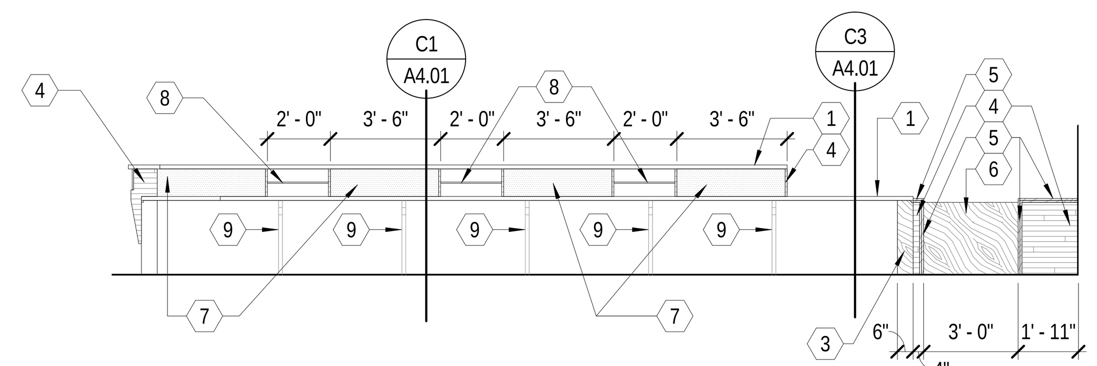

B4 RECEPTION DESK D

SCALE: 1/4" = 1'-0"

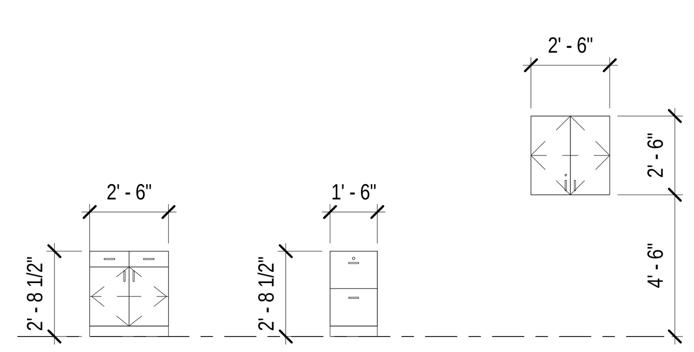

B1

P-LAM BASE UNIT - 24" DEEP W/ HINGED DOORS WITH LOCK, LOCKABLE DRAWERS & (1) ADJUSTABLE SHELF

B2

P-LAM BASE UNIT - 24" DEPTH 2 FILE DRAWERS (TO FIT PENDAFLEX) W/ LOCK SYSTEM

W1

P-LAM WALL UNIT - 14" DEPTH HINGED DOORS WITH LOCK

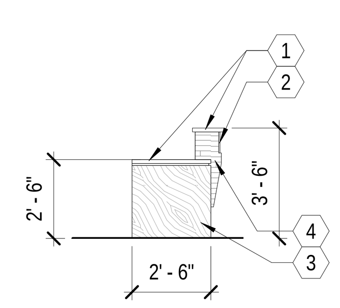

A2 RECEPTION DESK C

SCALE: 1/4" = 1'-0"

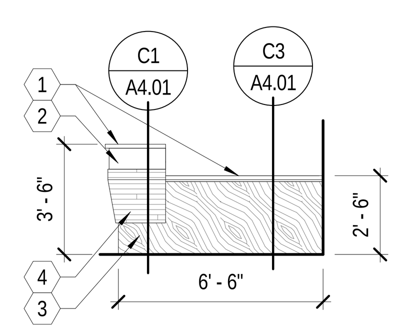

A3 RECEPTION DESK B

SCALE: 1/4" = 1'-0"

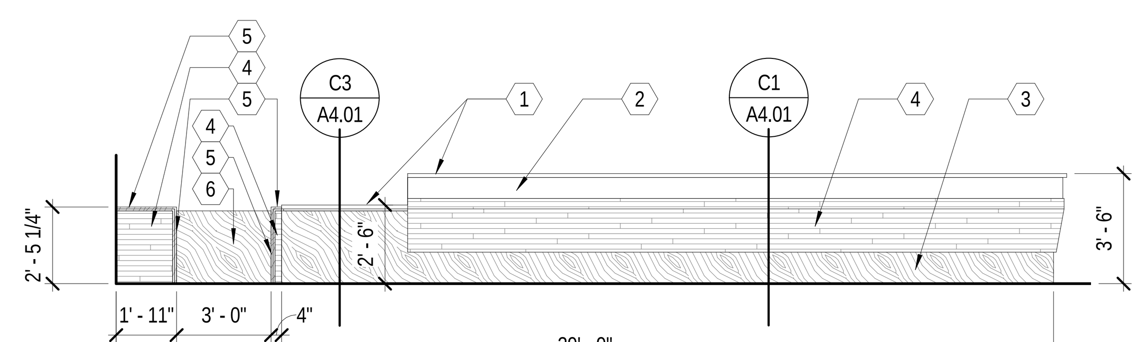

A4 RECEPTION DESK A

SCALE: 1/4" = 1'-0"

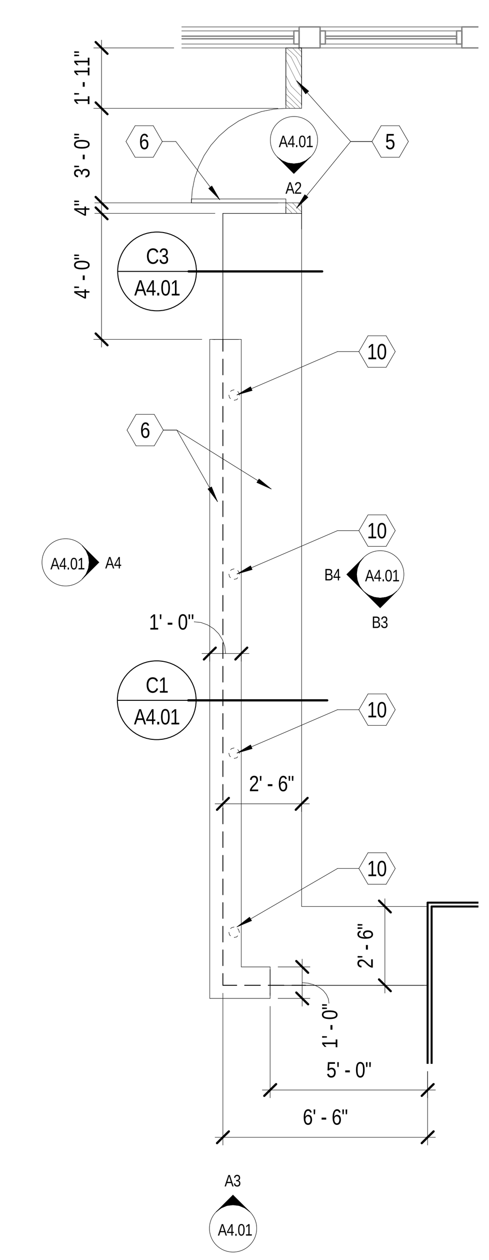

A5 RECEPTION DESK

SCALE: 1/4" = 1'-0"

MHTN ARCHITECTS
MHTN Architects, Inc.
420 East South Temple
Suite 100
Salt Lake City, Utah 84111
Telephone (801) 595-6700
Telefax (801) 595-6717
www.mhtn.com

OGDEN SCHOOL DISTRICT
Empowering Excellence Through Education

OGDEN SCHOOL DISTRICT

HIGHLAND JUNIOR HIGH SCHOOL REMODEL

325 GRAMERCY AVE.
OGDEN, UTAH 84404

©2011 MHTN ARCHITECTS, INC.
Drawings, written material, and design concepts shall not be used or reproduced in whole or part in any form or format without prior written consent of MHTN Architects, Inc. Do not scale drawings. Use given dimensions only. If not shown, verify correct dimensions with the Architect. Contractor shall check and verify all dimensions and conditions at job site.

SEAL

MHTN PROJECT NO. 2015505

DRAWN BY: Author CHECKED BY: Checker

ISSUED:

NO.	DATE	DESCRIPTION

CONTRACTOR TO VERIFY DRAWINGS IN FIELD USE REFLECT LAST REVISION DATE.

NO.	DATE	DESCRIPTION

SHEET NAME
CASEWORK / FINISH SCHEDULE

CONSTRUCTION DOCUMENTS
APRIL 15, 2015

SHEET NUMBER
A4.01

C:\Users\BenH\Documents\A15_2015505_OSD Highland JrHS remodel_Central_BenH.rvt
4/13/2015 12:47:57 PM

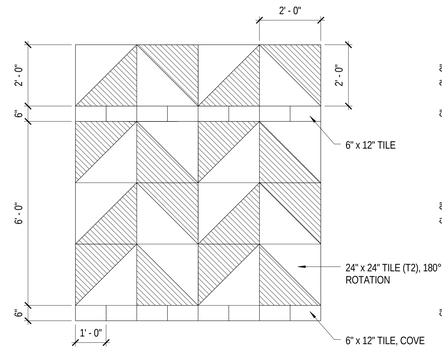

D1 GIRLS ACCENT TILE PATTERN

SCALE: 1/2" = 1'-0"

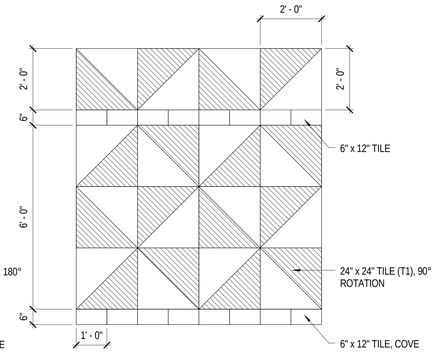

D2 BOYS ACCENT TILE PATTERN

SCALE: 1/2" = 1'-0"

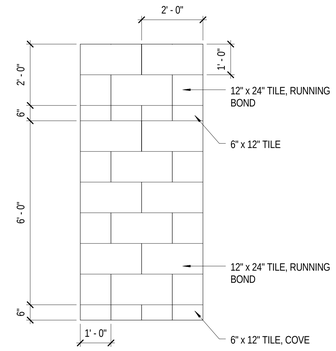

D3 TYPICAL TILE PATTERN

SCALE: 1/2" = 1'-0"

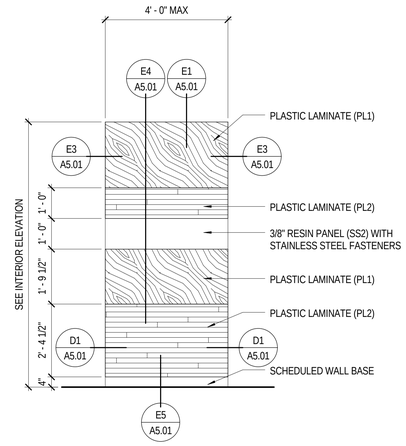

D4 PLASTIC LAMINATE PATTERN

SCALE: 1/2" = 1'-0"

ACCESSORY SCHEDULE	
NO.	ITEM
1	GRAB BAR (42")
2	GRAB BAR (36")
4	TOILET TISSUE DISPENSER, OFOI
5	18" VERTICAL GRAB BAR
6	MIRROR (24" X 36"), MOUNT @ 40" AFF
7	SOAP DISPENSER, OFOI
8	SURFACE MOUNTED SANITARY NAPKIN DISPOSAL, OFOI
9	FOLDING ADA SEAT

KEYNOTES - INTERIOR ELEVATIONS

1. CUSTOM VINYL WALL COVERING
2. SCHEDULED WALL BASE
3. SCHEDULED MILLWORK
4. 1-1/2" SOLID SURFACE COUNTERTOP WITH 4" BACKSPLASH
5. PLASTIC LAMINATE WALL PANELING
6. 3/8" RESIN PANEL (SS2) WITH STAINLESS STEEL FASTENERS
7. CERAMIC WALL TILE
8. 1" FILLER PANEL
9. ALUMINUM WIREMOLD, REFER TO ELECTRICAL - SEE B1/A5.01

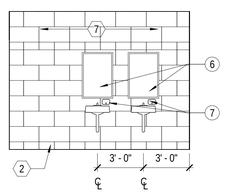

C1 GIRLS 124 WEST ELEV.

SCALE: 1/4" = 1'-0"

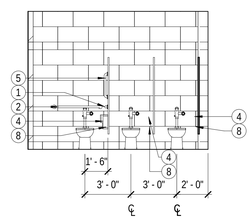

C2 GIRLS 124 EST ELEV.

SCALE: 1/4" = 1'-0"

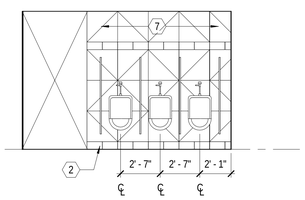

C3 BOYS 121 NORTH ELEV.

SCALE: 1/4" = 1'-0"

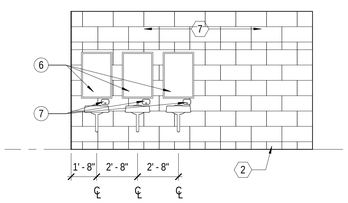

C4 BOYS 121 WEST ELEV.

SCALE: 1/4" = 1'-0"

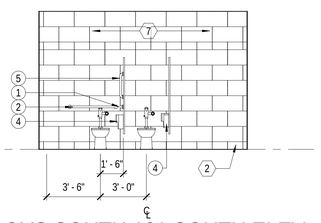

C5 BOYS SOUTH 121 SOUTH ELEV.

SCALE: 1/4" = 1'-0"

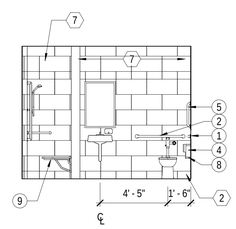

B2 UNISEX 112 EAST ELEV.

SCALE: 1/4" = 1'-0"

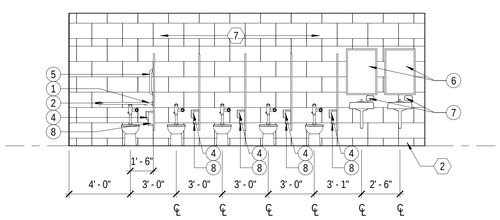

B3 GIRLS 103 SOUTH ELEVATION

SCALE: 1/4" = 1'-0"

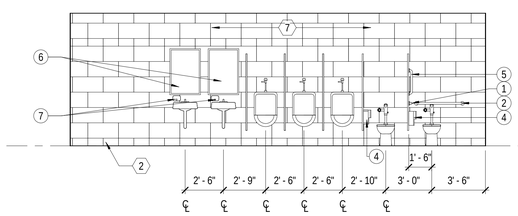

B4 BOYS 104 NORTH ELEVATION

SCALE: 1/4" = 1'-0"

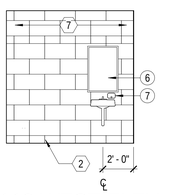

A1 BOYS 113 WEST ELEV.

SCALE: 1/4" = 1'-0"

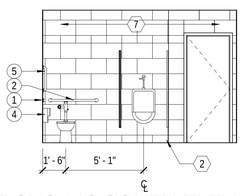

A2 BOYS 113 SOUTH ELEV.

SCALE: 1/4" = 1'-0"

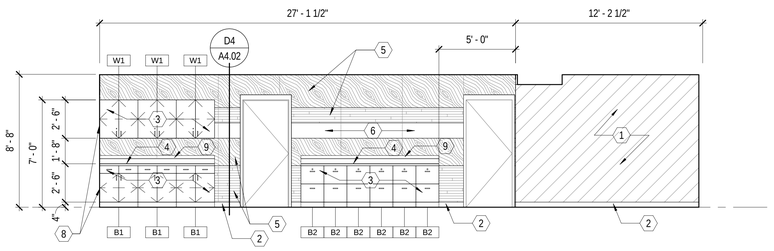

A3 RECEPTION ELEVATION - NORTH

SCALE: 1/4" = 1'-0"

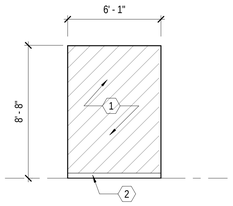

A5 RECEPTION ELEVATION - EAST

SCALE: 1/4" = 1'-0"

C:\Users\BrettH\Documents\A15_2015505_OSD Highland JHS remodel_Central_Brett.rvt
4/13/2015 12:48:00 PM

MHTN ARCHITECTS

MHTN Architects, Inc.
420 East South Temple
Suite 100
Salt Lake City, Utah 84111
Telephone (801) 595-6700
Telefax (801) 595-6717
www.mhtn.com

OGDEN SCHOOL DISTRICT
Empowering Excellence Through Education

OGDEN SCHOOL DISTRICT
HIGHLAND AND JUNIOR HIGH SCHOOL REMODEL
325 GRAMERCY AVE.
OGDEN, UTAH 84404

©2011 MHTN ARCHITECTS, INC.
Drawings, written material, and design concepts shall not be used or reproduced in whole or part in any form or format without prior written consent of MHTN Architects, Inc. Do not scale drawings. Use given dimensions only. If not shown, verify correct dimensions with the Architect. Contractor shall check and verify all dimensions and conditions at job site.

SEAL

STATE OF UTAH
BRIAN DAVID PARKER
6294273-0301
S AIA-2052
LICENSED ARCHITECT

MHTN PROJECT NO. 2015505

DRAWN BY: Author CHECKED BY: Checker

ISSUED:

NO.	DATE	DESCRIPTION

CONTRACTOR TO VERIFY DRAWINGS IN FIELD USE REFLECT LAST REVISION DATE.

NO.	DATE	DESCRIPTION

SHEET NAME
INTERIOR ELEVATIONS

CONSTRUCTION DOCUMENTS
APRIL 15, 2015

SHEET NUMBER
A4.02

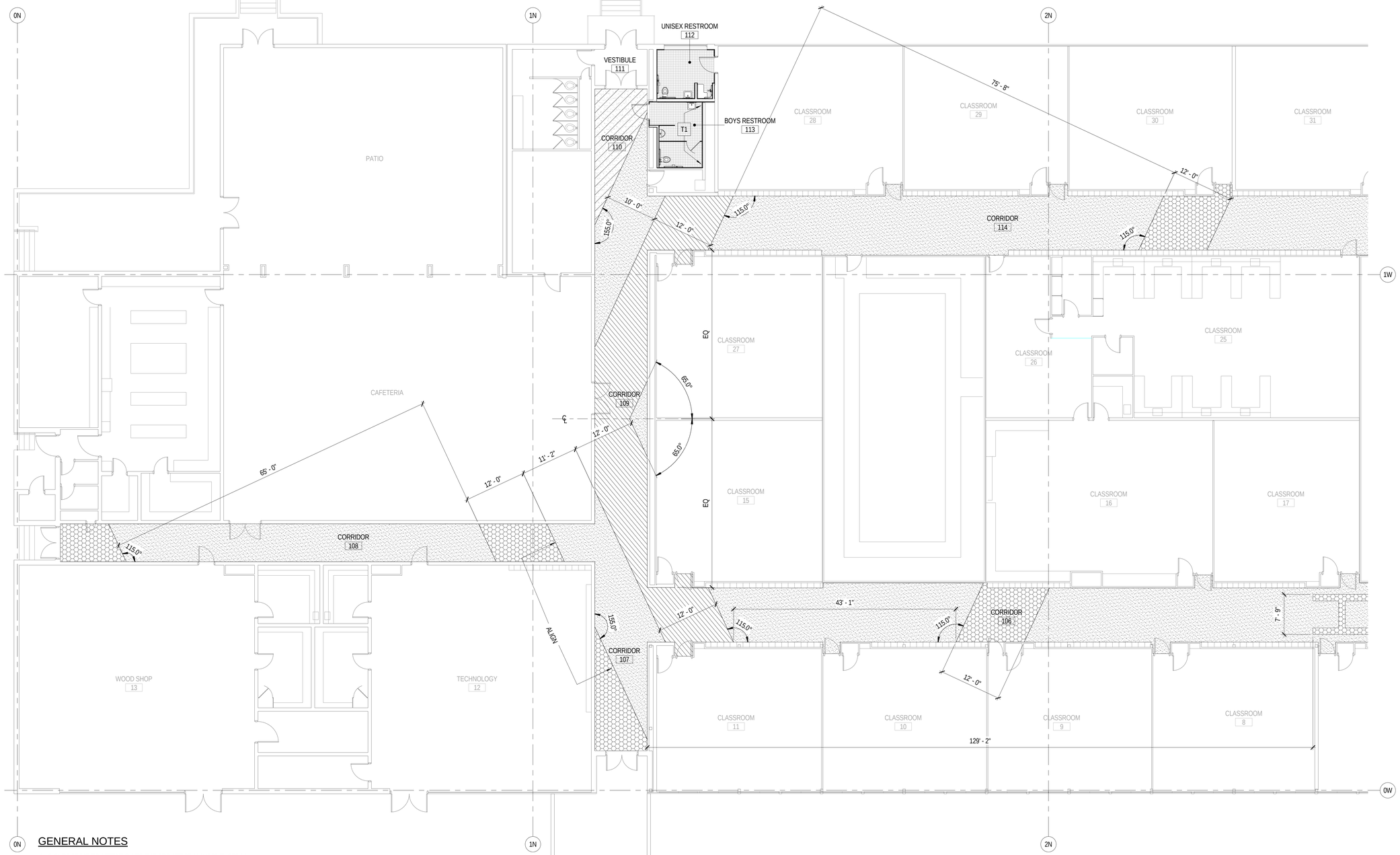

GENERAL NOTES

1. G.C. TO BRING TO ATTENTION TO THE ARCHITECT ANY CONFLICTS IN CONTRACT DOCUMENTS. WHERE CONFLICT OCCURS THE MOST STRINGENT REQUIREMENTS SHALL APPLY.

2. CONTRACTOR TO FOLLOW ALL MANUFACTURER SPECIFICATIONS FOR PRODUCT INSTALLATION, CARE AND MAINTENANCE.

3. REFER TO FLOOR FINISH PLANS FOR PATTERN DIMENSIONS.

5. ADJACENT FLOOR FINISH TO EXTEND BELOW MILLWORK, TYPICAL THROUGHOUT.

6. ALL INTERSECTIONS OF FLOOR FINISH MATERIALS SHALL BE LOCATED DIRECTLY UNDER THE CENTER OF DOOR, WHERE OCCURS, UNLESS NOTED OTHERWISE.

7. PROVIDE TRANSITION STRIPS AT ALL DISIMILAR MATERIALS.

FLOOR FINISH LEGEND

- F1 - WALK-OFF CARPET
- F2(a) - POLISHED CONCRETE
- F2(b) - POLISHED CONCRETE
- F2(c) - POLISHED CONCRETE
- F2(d) - POLISHED CONCRETE
- F3(a) - CARPET TILE - FIELD
- F3(b) - CARPET TILE - ACCENT
- F4 - PORCELAIN MOSAIC, BLEND

X WALL FINISH LEGEND

- P2 ACCENT WALL PAINT - BLUE
- T1 ACCENT TILE - BLEND ICE
- T2 ACCENT TILE PAINT - BLEND CLAY

FINISH PLAN - AREA 'A'

0 4' - 0" 8' - 0" 16' - 0"

SCALE: 1/8" = 1'-0"

N

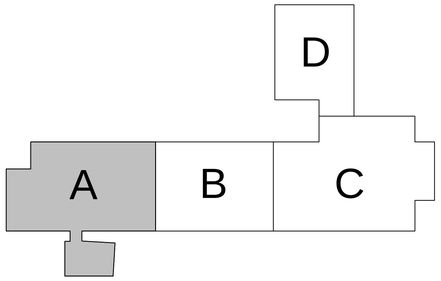

KEY PLAN

C:\Users\BenH\Documents\A15_2015505_OSD Highland JHS remodel_Central_BenH.rvt
4/13/2015 12:48:09 PM

MHTN ARCHITECTS
MHTN Architects, Inc.
420 East South Temple
Suite 100
Salt Lake City, Utah 84111
Telephone (801) 595-6700
Telefax (801) 595-6717
www.mhtn.com

OGDEN SCHOOL DISTRICT
Empowering Excellence Through Education

OGDEN SCHOOL DISTRICT
HIGHLAND JUNIOR HIGH SCHOOL REMODEL
325 GRAMERCY AVE.
OGDEN, UTAH 84404

©2011 MHTN ARCHITECTS, INC.
Drawings, written material, and design concepts shall not be used or reproduced in whole or part in any form or format without prior written consent of MHTN Architects, Inc. Do not scale drawings. Use given dimensions only. If not shown, verify correct dimensions with the Architect. Contractor shall check and verify all dimensions and conditions at job site.

SEAL

STATE OF UTAH
BRIAN DAVID PARKER
6294273-0301
S KIR-2202
LICENSED ARCHITECT

MHTN PROJECT NO. 2015505

DRAWN BY: Author CHECKED BY: Checker

ISSUED:

NO.	DATE	DESCRIPTION

CONTRACTOR TO VERIFY DRAWINGS IN FIELD USE REFLECT LAST REVISION DATE.

NO.	DATE	DESCRIPTION

SHEET NAME
FLOOR PATTERN PLAN - AREA 'A'

CONSTRUCTION DOCUMENTS
APRIL 15, 2015

SHEET NUMBER
A4.03

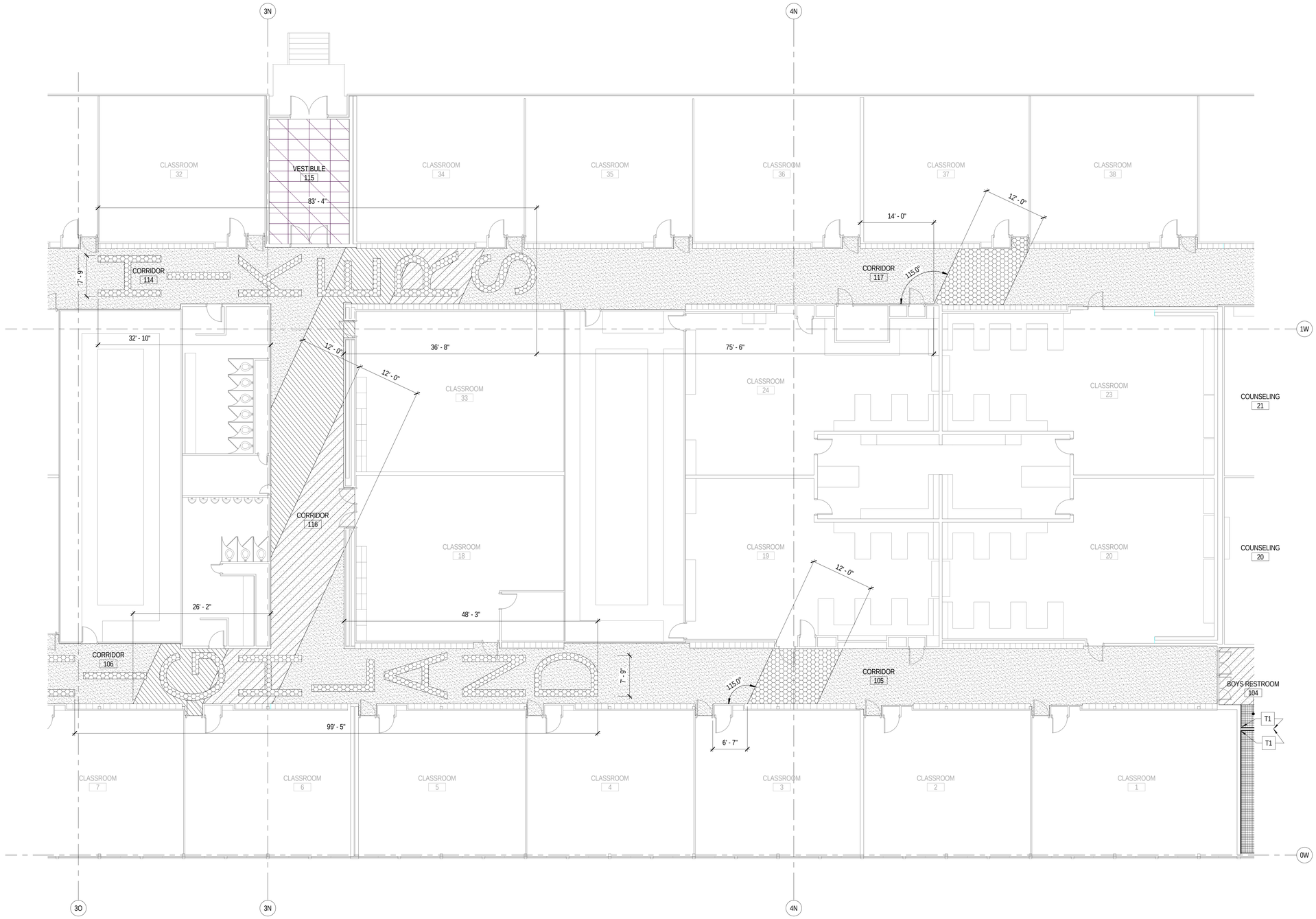

FINISH PLAN - AREA 'B'

0 4' - 0" 8' - 0" 16' - 0"

SCALE: 1/8" = 1'-0"

FLOOR FINISH LEGEND

- F1 - WALK-OFF CARPET
- F2(a) - POLISHED CONCRETE
- F2(b) - POLISHED CONCRETE
- F2(c) - POLISHED CONCRETE
- F2(d) - POLISHED CONCRETE
- F3(a) - CARPET TILE - FIELD
- F3(b) - CARPET TILE - ACCENT
- F4 - PORCELAIN MOSAIC, BLEND

GENERAL NOTES

1. G.C. TO BRING TO ATTENTION TO THE ARCHITECT ANY CONFLICTS IN CONTRACT DOCUMENTS. WHERE CONFLICT OCCURS THE MOST STRINGENT REQUIREMENTS SHALL APPLY.

2. CONTRACTOR TO FOLLOW ALL MANUFACTURER SPECIFICATIONS FOR PRODUCT INSTALLATION, CARE AND MAINTENANCE.

3. REFER TO FLOOR FINISH PLANS FOR PATTERN DIMENSIONS.

5. ADJACENT FLOOR FINISH TO EXTEND BELOW MILLWORK, TYPICAL THROUGHOUT.

6. ALL INTERSECTIONS OF FLOOR FINISH MATERIALS SHALL BE LOCATED DIRECTLY UNDER THE CENTER OF DOOR, WHERE OCCURS, UNLESS NOTED OTHERWISE.

7. PROVIDE TRANSITION STRIPS AT ALL DISIMILAR MATERIALS.

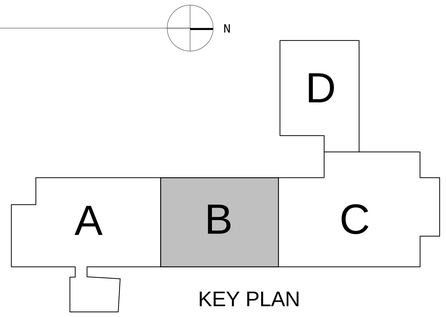

KEY PLAN

C:\Users\BenH\Documents\A15_2015505_OSD Highland JHS remodel_Central_BenH.rvt
4/13/2015 12:48:16 PM

MHTN ARCHITECTS
MHTN Architects, Inc.
420 East South Temple
Suite 100
Salt Lake City, Utah 84111
Telephone (801) 595-6700
Telefax (801) 595-6717
www.mhtn.com

OGDEN SCHOOL DISTRICT
Empowering Excellence Through Education

OGDEN SCHOOL DISTRICT
HIGHLAND JUNIOR HIGH SCHOOL REMODEL
325 GRAMERCY AVE.
OGDEN, UTAH 84404

©2011 MHTN ARCHITECTS, INC.
Drawings, written material, and design concepts shall not be used or reproduced in whole or part in any form or format without prior written consent of MHTN Architects, Inc. Do not scale drawings. Use given dimensions only. If not shown, verify correct dimensions with the Architect. Contractor shall check and verify all dimensions and conditions at job site.

SEAL

STATE OF UTAH
BRIAN DAVID PARKER
6294273-0301
S NR-2202
LICENSED ARCHITECT

MHTN PROJECT NO. 2015505

DRAWN BY: Author CHECKED BY: Checker

ISSUED:

NO.	DATE	DESCRIPTION

CONTRACTOR TO VERIFY DRAWINGS IN FIELD USE REFLECT LAST REVISION DATE.

NO.	DATE	DESCRIPTION

SHEET NAME
FLOOR PATTERN PLAN - AREA 'B'

CONSTRUCTION DOCUMENTS
APRIL 15, 2015

SHEET NUMBER
A4.04

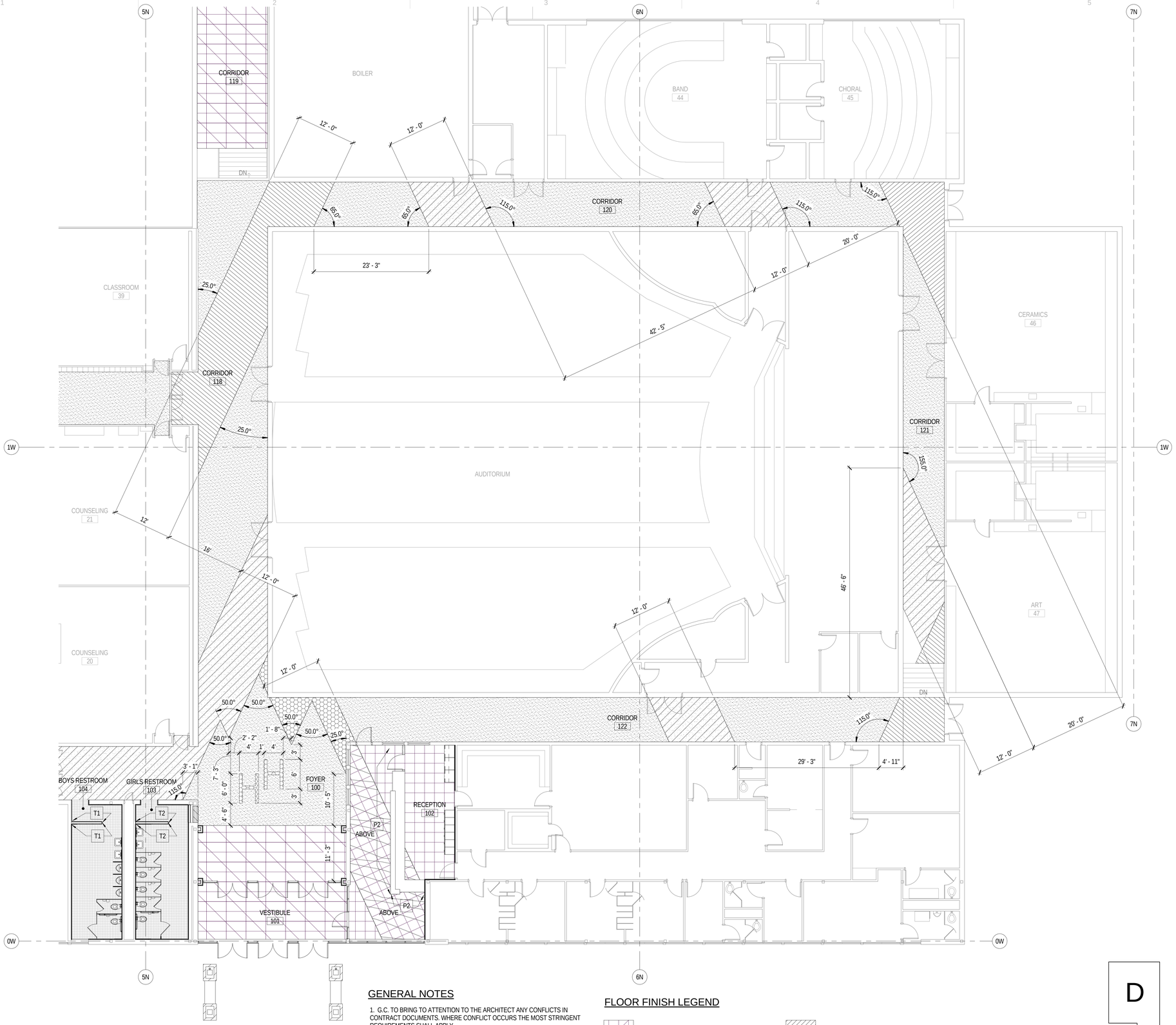

FINISH PLAN - AREA 'C'

0 4' - 0" 8' - 0" 16' - 0"

SCALE: 1/8" = 1'-0"

N

GENERAL NOTES

1. G.C. TO BRING TO ATTENTION TO THE ARCHITECT ANY CONFLICTS IN CONTRACT DOCUMENTS. WHERE CONFLICT OCCURS THE MOST STRINGENT REQUIREMENTS SHALL APPLY.

2. CONTRACTOR TO FOLLOW ALL MANUFACTURER SPECIFICATIONS FOR PRODUCT INSTALLATION, CARE AND MAINTENANCE.

3. REFER TO FLOOR FINISH PLANS FOR PATTERN DIMENSIONS.

5. ADJACENT FLOOR FINISH TO EXTEND BELOW MILLWORK, TYPICAL THROUGHOUT.

6. ALL INTERSECTIONS OF FLOOR FINISH MATERIALS SHALL BE LOCATED DIRECTLY UNDER THE CENTER OF DOOR, WHERE OCCURS, UNLESS NOTED OTHERWISE.

7. PROVIDE TRANSITION STRIPS AT ALL DISIMILAR MATERIALS.

FLOOR FINISH LEGEND

- F1 - WALK-OFF CARPET
- F2(a) - POLISHED CONCRETE
- F2(b) - POLISHED CONCRETE
- F2(c) - POLISHED CONCRETE
- F2(d) - POLISHED CONCRETE
- F3(a) - CARPET TILE - FIELD
- F3(b) - CARPET TILE - ACCENT
- F4 - PORCELAIN MOSAIC, BLEND

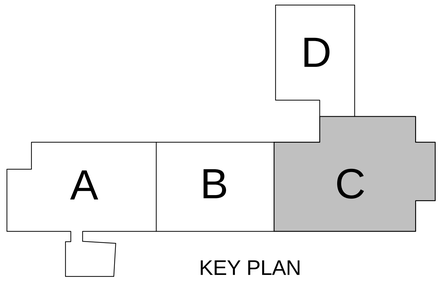

KEY PLAN

MHTN ARCHITECTS
MHTN Architects, Inc.
420 East South Temple
Suite 100
Salt Lake City, Utah 84111
Telephone (801) 595-6700
Telefax (801) 595-6717
www.mhtn.com

OGDEN SCHOOL DISTRICT
Empowering Excellence Through Education

OGDEN SCHOOL DISTRICT
HIGHLAND JUNIOR HIGH SCHOOL
REMODEL
325 GRAMERCY AVE.
OGDEN, UTAH 84404

©2011 MHTN ARCHITECTS, INC.
Drawings, written material, and design concepts shall not be used or reproduced in whole or part in any form or format without prior written consent of MHTN Architects, Inc. Do not scale drawings. Use given dimensions only. Field shown, verify correct dimensions with the Architect. Contractor shall check and verify all dimensions and conditions at job site.

SEAL

STATE OF UTAH
BRIAN DAVID PARKER
6294273-0301
15 NOV 2015
LICENSED ARCHITECT

MHTN PROJECT NO. 2015505

DRAWN BY: Author CHECKED BY: Checker

ISSUED:

NO.	DATE	DESCRIPTION

CONTRACTOR TO VERIFY DRAWINGS IN FIELD USE REFLECT LAST REVISION DATE.

NO.	DATE	DESCRIPTION

SHEET NAME
FLOOR PATTERN PLAN - AREA 'C'

CONSTRUCTION DOCUMENTS
APRIL 15, 2015

SHEET NUMBER
A4.05

C:\Users\BenH\Documents\A15_2015595_OSD Highland JrHS remodel_Central_BenH.rvt
4/13/2015 12:48:24 PM

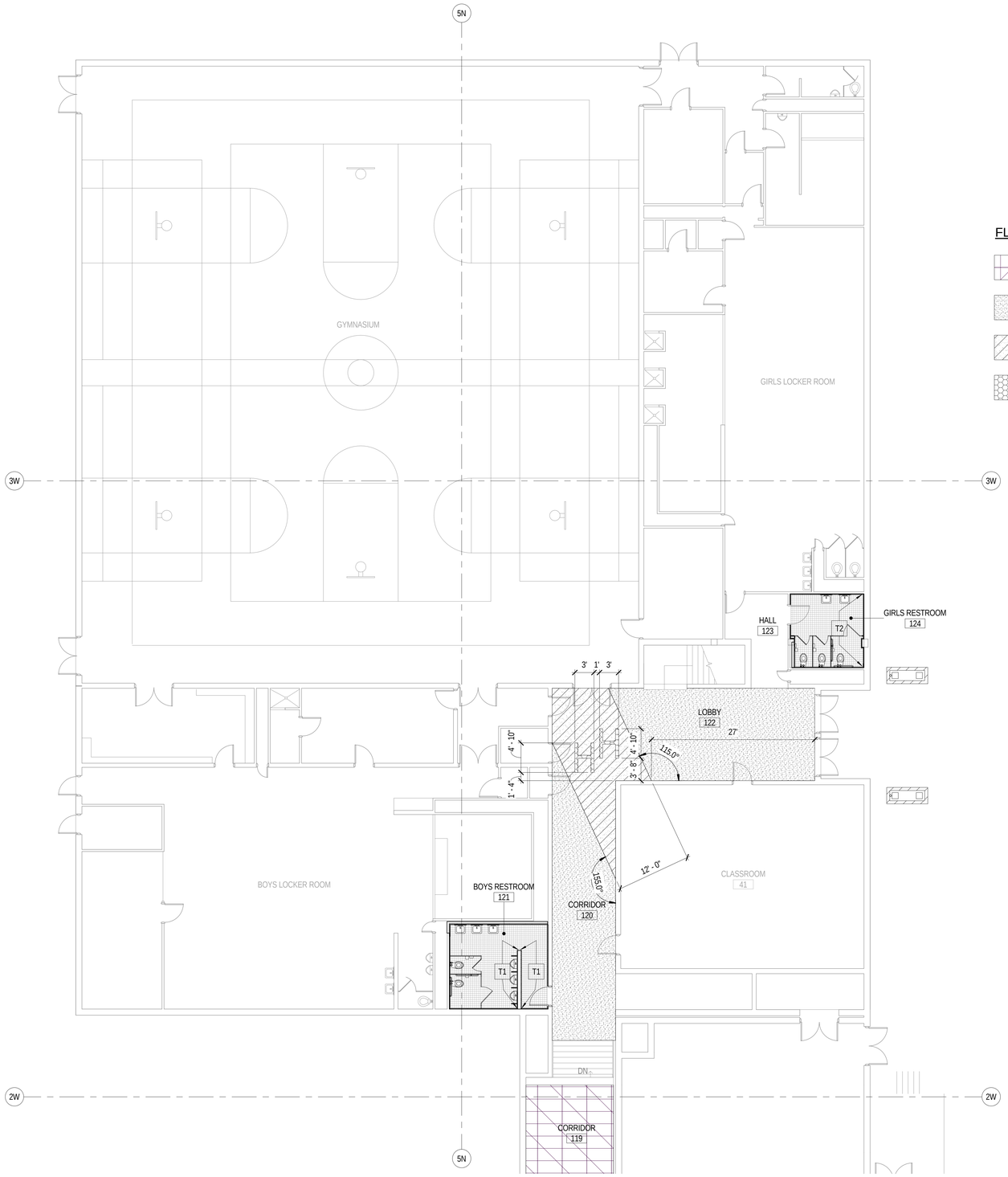

FINISH PLAN - AREA 'D'

0 4' - 0" 8' - 0" 16' - 0"

SCALE: 1/8" = 1'-0"

N

GENERAL NOTES

1. G.C. TO BRING TO ATTENTION TO THE ARCHITECT ANY CONFLICTS IN CONTRACT DOCUMENTS. WHERE CONFLICT OCCURS THE MOST STRINGENT REQUIREMENTS SHALL APPLY.

2. CONTRACTOR TO FOLLOW ALL MANUFACTURER SPECIFICATIONS FOR PRODUCT INSTALLATION, CARE AND MAINTENANCE.

3. REFER TO FLOOR FINISH PLANS FOR PATTERN DIMENSIONS.

5. ADJACENT FLOOR FINISH TO EXTEND BELOW MILLWORK, TYPICAL THROUGHOUT.

6. ALL INTERSECTIONS OF FLOOR FINISH MATERIALS SHALL BE LOCATED DIRECTLY UNDER THE CENTER OF DOOR, WHERE OCCURS, UNLESS NOTED OTHERWISE.

7. PROVIDE TRANSITION STRIPS AT ALL DISIMILAR MATERIALS.

FLOOR FINISH LEGEND

- F1 - WALK-OFF CARPET
- F2(a) - POLISHED CONCRETE
- F2(b) - POLISHED CONCRETE
- F2(c) - POLISHED CONCRETE
- F2(d) - POLISHED CONCRETE
- F3(a) - CARPET TILE - FIELD
- F3(b) - CARPET TILE - ACCENT
- F4 - PORCELAIN MOSAIC, BLEND

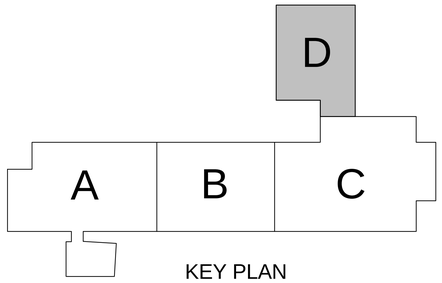

KEY PLAN

MHTN
ARCHITECTS
MHTN Architects, Inc.
420 East South Temple
Suite 100
Salt Lake City, Utah 84111
Telephone (801) 595-6700
Telefax (801) 595-6717
www.mhtn.com

OGDEN SCHOOL DISTRICT
Empowering Excellence Through Education

OGDEN SCHOOL DISTRICT
HIGHLAND JUNIOR HIGH SCHOOL
REMODEL
325 GRAMERCY AVE.
OGDEN, UTAH 84404

©2011 MHTN ARCHITECTS, INC.
Drawings, written material, and design concepts shall not be used or reproduced in whole or part in any form or format without prior written consent of MHTN Architects, Inc. Do not scale drawings. Use given dimensions only. If not shown, verify correct dimensions with the Architect. Contractor shall check and verify all dimensions and conditions at job site.

SEAL

STATE OF UTAH
BRIAN DAVID PARKER
6294273-0301
15 NOV 2015
LICENSED ARCHITECT

MHTN PROJECT NO. 2015505

DRAWN BY: Author CHECKED BY: Checker

ISSUED:

NO.	DATE	DESCRIPTION

CONTRACTOR TO VERIFY DRAWINGS IN FIELD USE REFLECT LAST REVISION DATE:

NO.	DATE	DESCRIPTION

SHEET NAME
FLOOR PATTERN PLAN - AREA 'D'

CONSTRUCTION DOCUMENTS
APRIL 15, 2015

SHEET NUMBER
A4.06

C:\Users\BenH\Documents\A15_2015505_OSD Highland JrHS remodel_Central_BenH.rvt
4/13/2015 12:48:27 PM

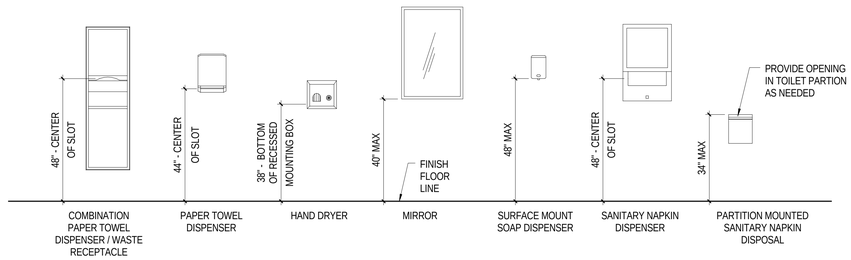

C1 RESTROOM EQUIPMENT

SCALE: 1/2" = 1'-0"

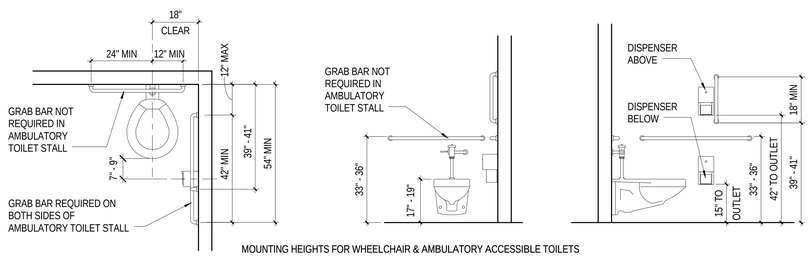

B1 TOILET PLAN AND ELEVATIONS

SCALE: 1/2" = 1'-0"

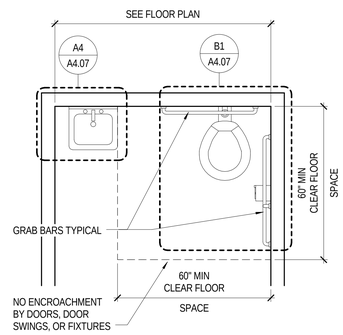

B3 SINGLE OCCUPANT TOILET ROOM

SCALE: 1/2" = 1'-0"

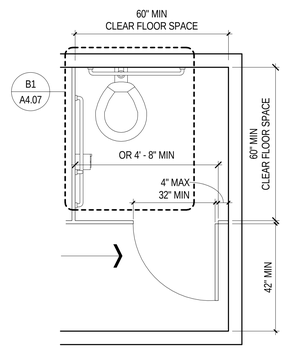

B5 WHEELCHAIR ACCESSIBLE STALL

SCALE: 1/2" = 1'-0"

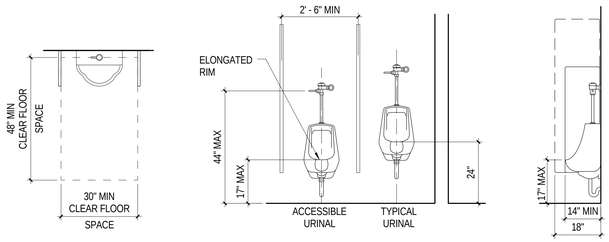

A1 URINAL PLAN AND ELEVATIONS

SCALE: 1/2" = 1'-0"

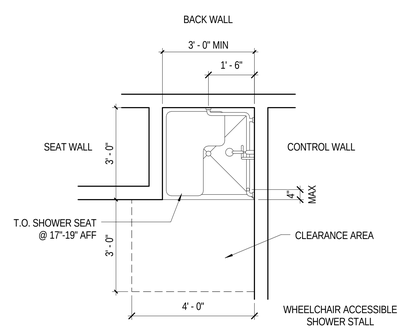

A2 WHEELCHAIR SHOWER STALL

SCALE: 1/2" = 1'-0"

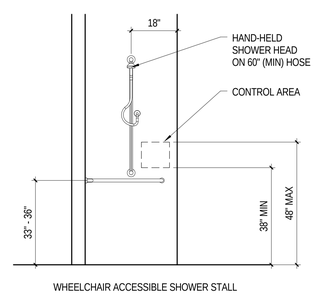

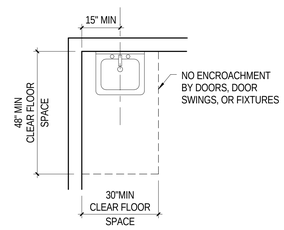

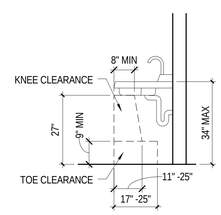

NOTE: INSULATE PIPE WHEN EXPOSED (NO SHARP OR ABRASIVE SURFACES BELOW LAVATORY)

A4 ACCESSIBLE LAVATORY

SCALE: 1/2" = 1'-0"

C:\Users\BenH\Documents\A15_2015505_OSD Highland JrHS remodel_Central_BenH.rvt
4/13/2015 12:48:28 PM

MHTN ARCHITECTS
MHTN Architects, Inc.
420 East South Temple
Suite 100
Salt Lake City, Utah 84111
Telephone (801) 595-6700
Telefax (801) 595-6717
www.mhtn.com

OGDEN SCHOOL DISTRICT
Empowering Excellence Through Education

OGDEN SCHOOL DISTRICT
HIGHLAND JUNIOR HIGH SCHOOL REMODEL
325 GRAMERCY AVE.
OGDEN, UTAH 84404

©2011 MHTN ARCHITECTS, INC.
Drawings, written material, and design concepts shall not be used or reproduced in whole or part in any form or format without prior written consent of MHTN Architects, Inc. Do not scale drawings. Use given dimensions only. If not shown, verify correct dimensions with the Architect. Contractor shall check and verify all dimensions and conditions at job site.

SEAL

STATE OF UTAH
BRIAN DAVID PARKER
6294273-0301
LICENSED ARCHITECT

MHTN PROJECT NO. 2015505

DRAWN BY: Author CHECKED BY: Checker

ISSUED:

NO.	DATE	DESCRIPTION

CONTRACTOR TO VERIFY DRAWINGS IN FIELD USE REFLECT LAST REVISION DATE.

NO.	DATE	DESCRIPTION

SHEET NAME
ADA MOUNTING STANDARDS

CONSTRUCTION DOCUMENTS
APRIL 15, 2015

SHEET NUMBER
A4.07

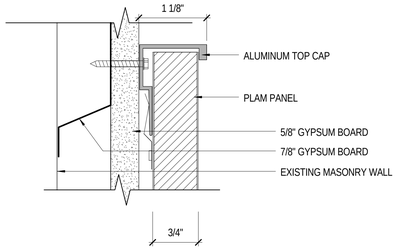

E1 DETAIL
SCALE: 12" = 1'-0"

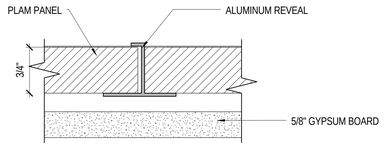

E2 DETAIL
SCALE: 12" = 1'-0"

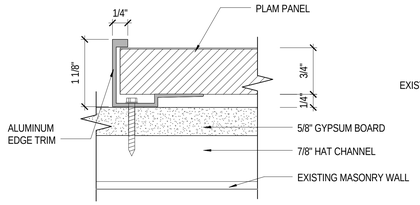

E3 DETAIL
SCALE: 12" = 1'-0"

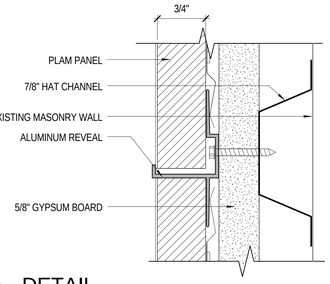

E4 DETAIL
SCALE: 12" = 1'-0"

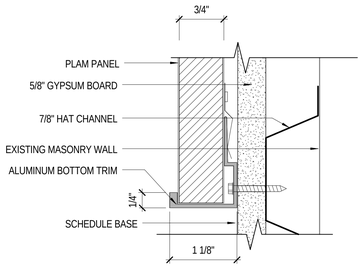

E5 DETAIL
SCALE: 12" = 1'-0"

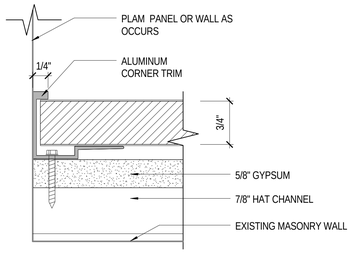

D1 DETAIL
SCALE: 12" = 1'-0"

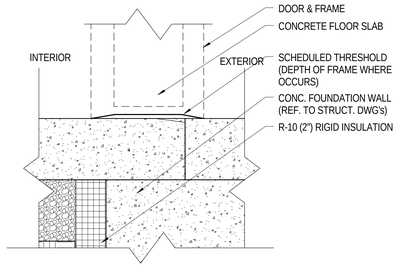

D2 DETAIL
SCALE: 3" = 1'-0"

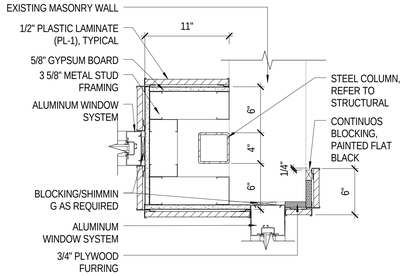

D3 DETAIL
SCALE: 1 1/2" = 1'-0"

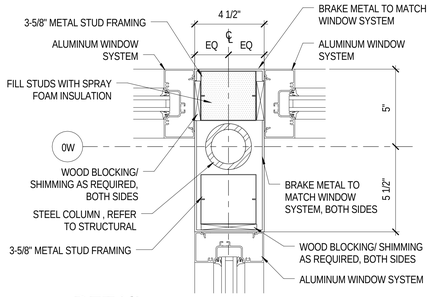

D4 DETAIL
SCALE: 3" = 1'-0"

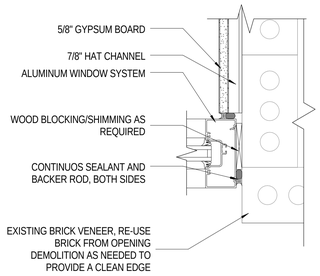

D5 DETAIL
SCALE: 3" = 1'-0"

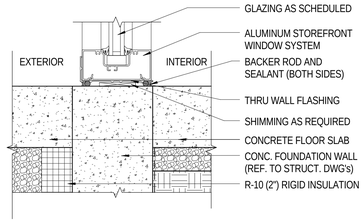

C1 DETAIL
SCALE: 3" = 1'-0"

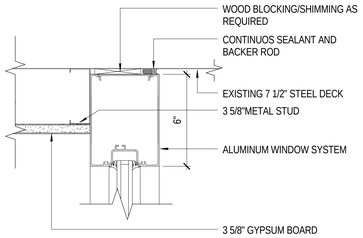

C2 WINDOW DETAIL
SCALE: 3" = 1'-0"

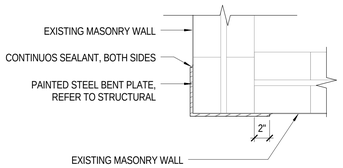

C3 DETAIL
SCALE: 1 1/2" = 1'-0"

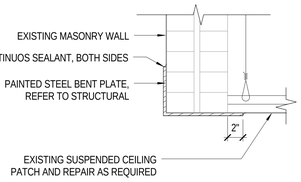

C4 DETAIL
SCALE: 1 1/2" = 1'-0"

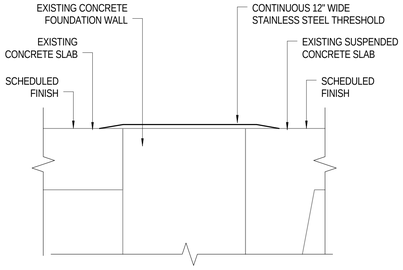

C5 SILL DETAIL (HALL)
SCALE: 3" = 1'-0"

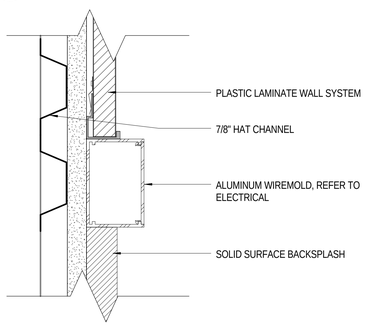

B1 DETAIL
SCALE: 6" = 1'-0"

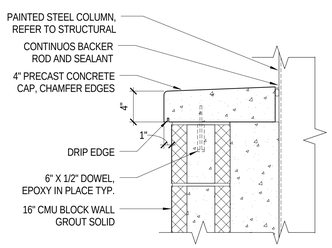

B2 DETAIL
SCALE: 1 1/2" = 1'-0"

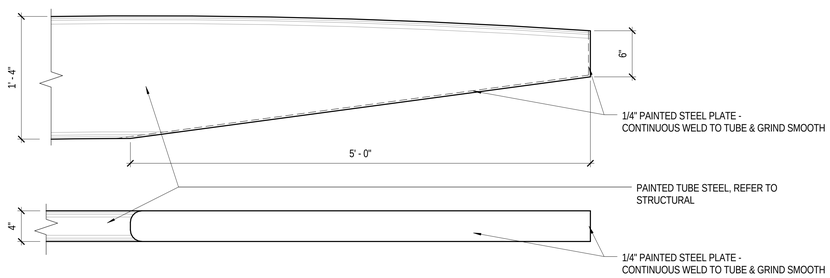

B3 DETAIL
SCALE: 1 1/2" = 1'-0"

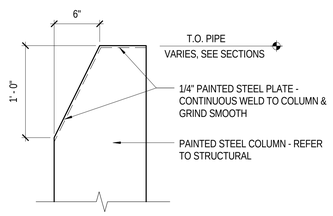

B5 DETAIL
SCALE: 1 1/2" = 1'-0"

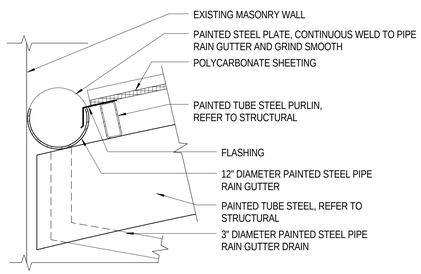

A1 DETAIL
SCALE: 1" = 1'-0"

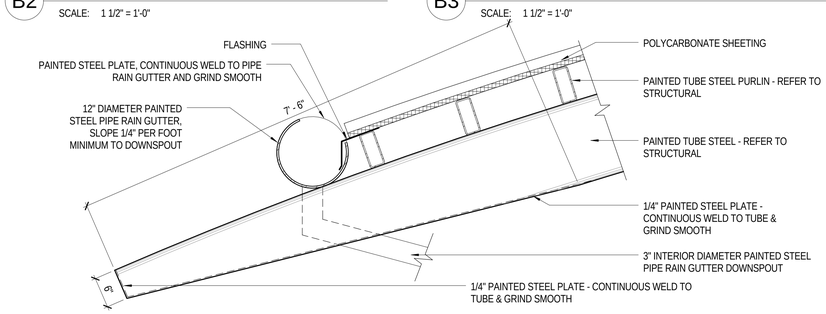

A2 DETAIL
SCALE: 1" = 1'-0"

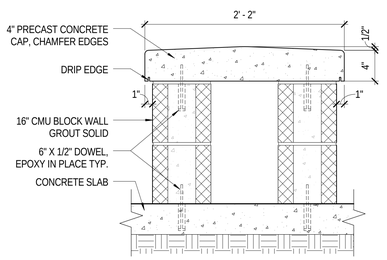

A4 DETAIL
SCALE: 1 1/2" = 1'-0"

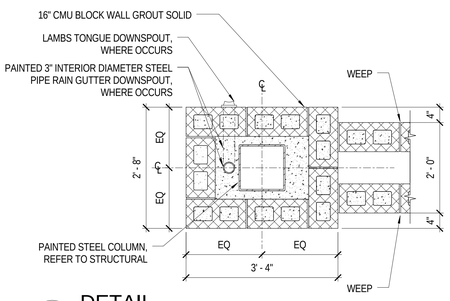

A5 DETAIL
SCALE: 3/4" = 1'-0"

C:\Users\BenH\Documents\A15_2015505_OSD Highland JHS remodel_Central_BenH.rvt
4/13/2015 12:48:30 PM

MHTN ARCHITECTS
MHTN Architects, Inc.
420 East South Temple
Suite 100
Salt Lake City, Utah 84111
Telephone (801) 595-6700
Telefax (801) 595-6717
www.mhtn.com

OGDEN SCHOOL DISTRICT
Empowering Excellence Through Education

OGDEN SCHOOL DISTRICT
HIGHLAND JUNIOR HIGH SCHOOL REMODEL
325 GRAMERCY AVE.
OGDEN, UTAH 84404

©2011 MHTN ARCHITECTS, INC.
Drawings, written material, and design concepts shall not be used or reproduced in whole or part in any form or format without prior written consent of MHTN Architects, Inc. Do not scale drawings. Use given dimensions only. If not shown, verify correct dimensions with the Architect. Contractor shall check and verify all dimensions and conditions at job site.

SEAL

STATE OF UTAH
BRIAN DAVID PARKER
6294273-0301
15 NA 205
LICENSED ARCHITECT

MHTN PROJECT NO. 2015505
DRAWN BY: Author CHECKED BY: Checker

ISSUED:

NO.	DATE	DESCRIPTION

CONTRACTOR TO VERIFY DRAWINGS IN FIELD-USE REFLECT LAST REVISION DATE.

NO.	DATE	DESCRIPTION

SHEET NAME
DETAILS

CONSTRUCTION DOCUMENTS
APRIL 15, 2015

SHEET NUMBER
A5.01

DOOR AND FRAME SCHEDULE

DOOR #	DOOR TYPE	DOOR LEAVES	DOOR WIDTH	DOOR HEIGHT	DOOR THICKNESS	DOOR MATERIAL	FRAME TYPE	FRAME DEPTH	FRAME MATERIAL	JAMB DETAIL	HEAD DETAIL	SILL DETAIL	ELECTRICAL	FIRE RATING (IN MIN.)	HARDWARE GROUP	REMARKS	DOOR #
101A	2	2	6' - 0"	7' - 0"	1 3/4"	AL	-		AL				Yes		B		101A
101B	2	2	6' - 0"	7' - 0"	1 3/4"	AL	-		AL				Yes		B		101B
101C	2	2	6' - 0"	7' - 0"	1 3/4"	AL	-		AL				Yes		A		101C
101D	2	2	6' - 0"	7' - 0"	1 3/4"	AL	-		AL				Yes		B		101D
101E	2	2	6' - 0"	7' - 0"	1 3/4"	AL	-		AL				Yes		B		101E
101F	2	2	6' - 0"	7' - 0"	1 3/4"	AL	-		AL				Yes		A		101F
102A	1		3' - 0"	7' - 0"	1 3/4"	AL	-		AL				Yes		C		102A
102B	3		3' - 0"	7' - 0"	1 3/4"	WD	EXISTING		HM				Yes		1	REPLACE DOOR PANEL, NEW HARDWARE	102B
112	1		3' - 0"	7' - 0"	1 3/4"	WD	1		HM						4		112
113	1		2' - 10"	7' - 0"	1 3/4"	WD	EXISTING		HM						2	REPLACE DOOR PANEL, NEW HARDWARE	113
121	1		3' - 0"	6' - 8"	1 3/4"	WD	EXISTING		HM						3	REPLACE DOOR PANEL, NEW HARDWARE	121
Grand total: 11																	

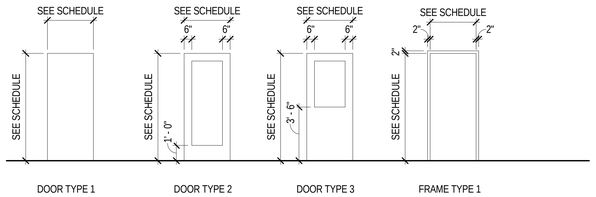

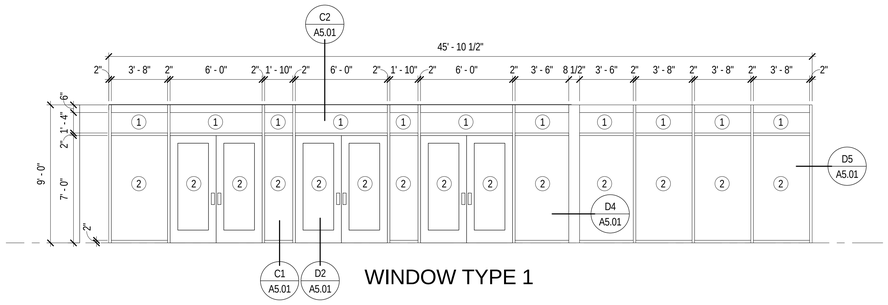

WINDOW TYPE 1

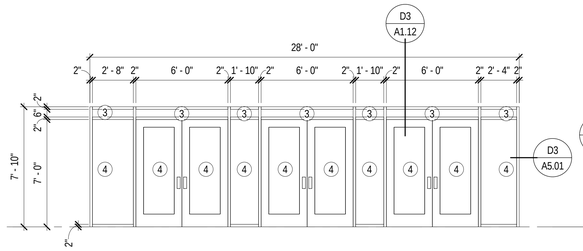

WINDOW TYPE 2

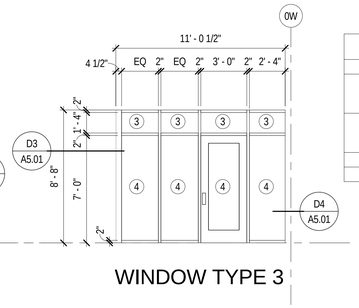

WINDOW TYPE 3

GLAZING SCHEDULE	
TYPE	GLASS
1	1" INSULATED GLASS, LOW-E COATING, TYPICAL U.N.O.
2	1" INSULATED GLASS, LOW-E COATING, TEMPERED
3	1/4" GLASS
4	1/4" GLASS, TEMPERED

C:\Users\BenH\Documents\A15_2015505_OSD Highland JrHS remodel_Central_BenH.rvt
4/13/2015 12:48:31 PM

MHTN ARCHITECTS
MHTN Architects, Inc.
420 East South Temple
Suite 100
Salt Lake City, Utah 84111
Telephone (801) 595-6700
Telefax (801) 595-6717
www.mhtn.com

OGDEN SCHOOL DISTRICT
Empowering Excellence Through Education

OGDEN SCHOOL DISTRICT
HIGHLAND JUNIOR HIGH SCHOOL REMODEL
325 GRAMERCY AVE.
OGDEN, UTAH 84404

©2011 MHTN ARCHITECTS, INC.
Drawings, written material, and design concepts shall not be used or reproduced in whole or part in any form or format without prior written consent of MHTN Architects, Inc. Do not scale drawings. Use given dimensions only. If not shown, verify correct dimensions with the Architect. Contractor shall check and verify all dimensions and conditions at job site.

SEAL

STATE OF UTAH
BRIAN DAVID PARKER
6294273-0301
LICENSED ARCHITECT

MHTN PROJECT NO. 2015505

DRAWN BY: Author CHECKED BY: Checker

ISSUED:

NO.	DATE	DESCRIPTION

CONTRACTOR TO VERIFY DRAWINGS IN FIELD USE REFLECT LAST REVISION DATE.

NO.	DATE	DESCRIPTION

SHEET NAME

DOOR SCHEDULE AND WINDOW TYPES

CONSTRUCTION DOCUMENTS
APRIL 15, 2015

SHEET NUMBER

A6.01

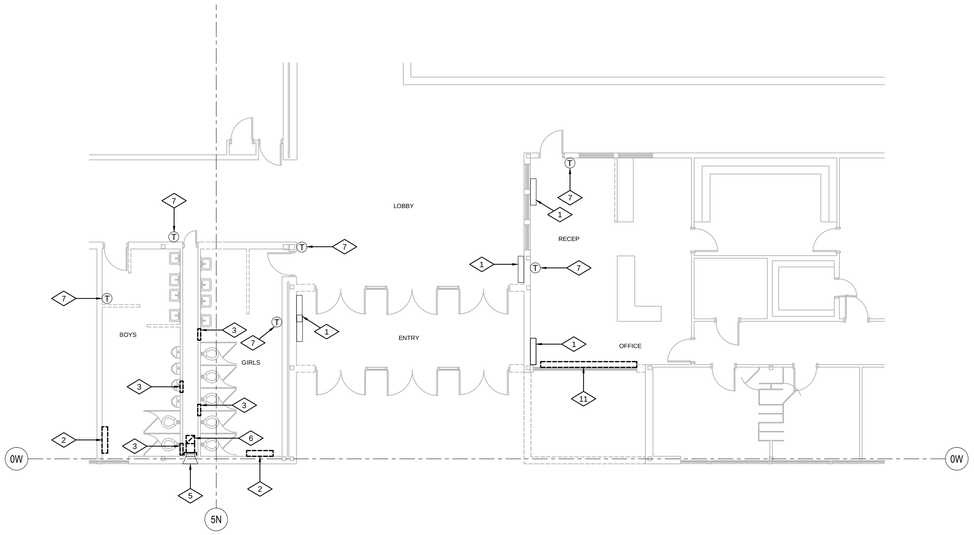

ENTRY AREA MECHANICAL DEMOLITION PLAN

SCALE: 1/8" = 1'-0"

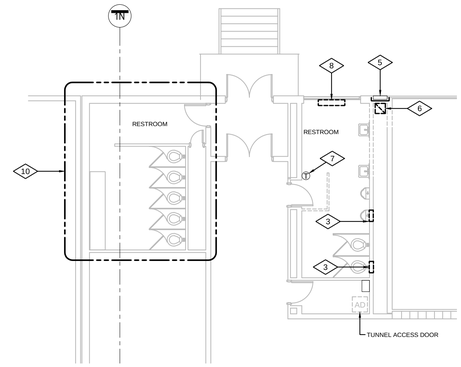

BOYS RESTROOM MECHANICAL DEMOLITION PLAN

SCALE: 1/8" = 1'-0"

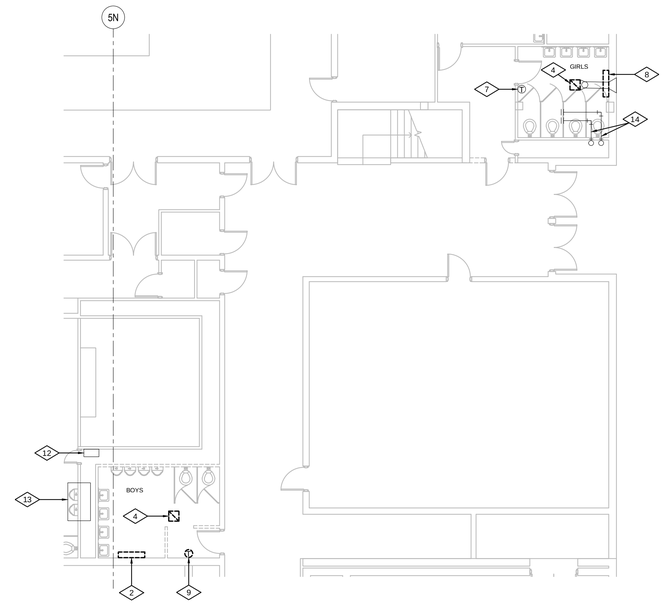

GYM RESTROOM MECHANICAL DEMOLITION PLAN

SCALE: 1/8" = 1'-0"

MECHANICAL DEMOLITION NOTES

1. EXISTING CABINET UNIT HEATER TO REMAIN INTACT.
2. EXISTING CABINET UNIT HEATER TO BE REMOVED AND RE-INSTALLED AS NEEDED FOR INSTALLATION OF NEW FLOOR TILE.
3. REMOVE EXISTING 16"x8" EXHAUST GRILLE. WALL OPENING TO STAY INTACT.
4. REMOVE AND SCRAP EXISTING CEILING EXHAUST FAN. EXISTING EXHAUST DUCT TO REMAIN INTACT.
5. EXISTING LOUVER TO REMAIN INTACT. CAP AT INTERIOR WALL.
6. REMOVE EXISTING EXHAUST FAN AND ASSOCIATED DUCTWORK COMPLETE.
7. EXISTING THERMOSTAT TO REMAIN INTACT.
8. EXISTING CABINET UNIT HEATER TO BE REMOVED AND RE-LOCATED. SEE DRAWING M1.02 FOR RELOCATION..
9. REMOVE EXISTING THERMOSTAT COVER PLATE.
10. NO MECHANICAL WORK REQUIRED IN THIS AREA.
11. REMOVE EXISTING BASEBOARD RADIATION UNIT COMPLETE. CAP HEATING HOT WATER SUPPLY AND RETURN LINES IN UTILITY TUNNEL BELOW FLOOR.
12. EXISTING ATC CONTROL PANEL SERVING FAN COIL UNIT TO BE REMOVED AND RELOCATED. SEE DRAWING M1.02 FOR RELOCATION.
13. EXISTING FAN COIL UNIT ABOVE CEILING TO REMAIN INTACT.
14. REMOVE EXISTING HEATING HOT WATER SUPPLY AND RETURN PIPING BRANCH LINES BACK TO MAINS AND CAP.

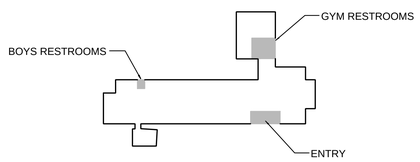

OLSEN & PETERSON
consulting engineers, inc.
1 East 2700 South, Salt Lake City, UT 84115
Phone: (801) 486-4848 Fax: (801) 467-2531

MHTN
ARCHITECTS
MHTN Architects, Inc.
420 East South Temple
Suite 100
Salt Lake City, Utah 84111
Telephone (801) 595-6700
Telefax (801) 595-6717
www.mhtn.com

OGDEN SCHOOL DISTRICT
Empowering Excellence Through Education

OGDEN SCHOOL DISTRICT
HIGHLAND JUNIOR HIGH SCHOOL REMODEL
325 GRAMERCY AVE.
OGDEN, UTAH 84404

©2011 MHTN ARCHITECTS, INC.
Drawings, written material, and design concepts shall not be used or reproduced in whole or part in any form or format without prior written consent of MHTN Architects, Inc. Do not scale drawings. Use given dimensions only. If not shown, verify correct dimensions with the Architect. Contractor shall check and verify all dimensions and conditions at job site.

SEAL

MHTN PROJECT NO. 2015505

DRAWN BY: STAFF CHECKED BY: PWL

ISSUED:

NO.	DATE	DESCRIPTION

CONTRACTOR TO VERIFY DRAWINGS IN FIELD USE REFLECT LAST REVISION DATE.

NO.	DATE	DESCRIPTION

SHEET NAME

MECHANICAL DEMO PLANS

CONSTRUCTION DOCUMENTS
APRIL 15, 2015

SHEET NUMBER

MD1.02

T:\15051 - Highland JHS Remodel\Drawings\Architectural\A15_20155051_OSD Highland JHS remodel_Central.rvt
3/11/2015 9:50:05 AM

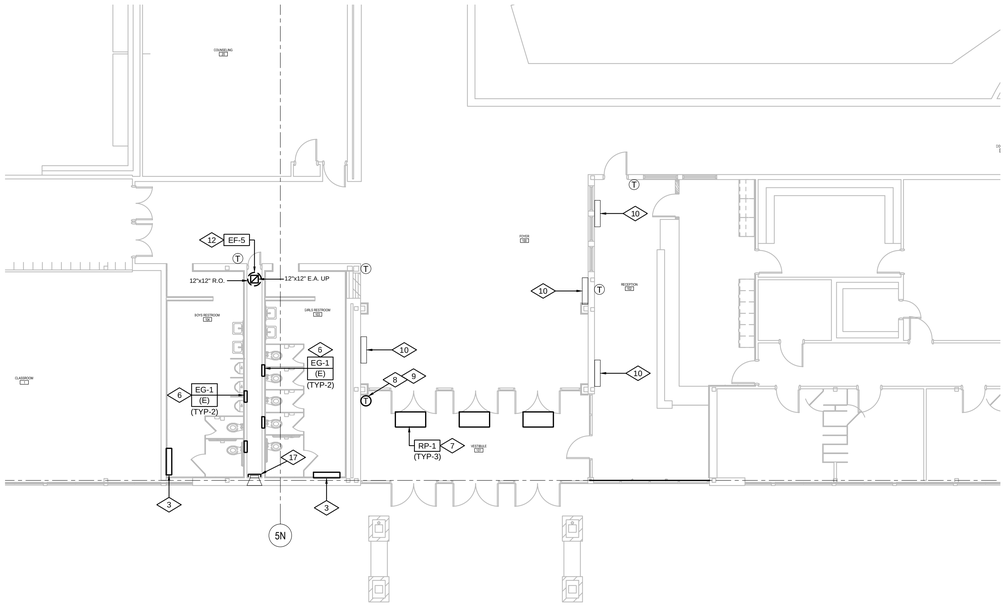

ENTRY AREA MECHANICAL PLAN

SCALE: 1/8" = 1'-0"

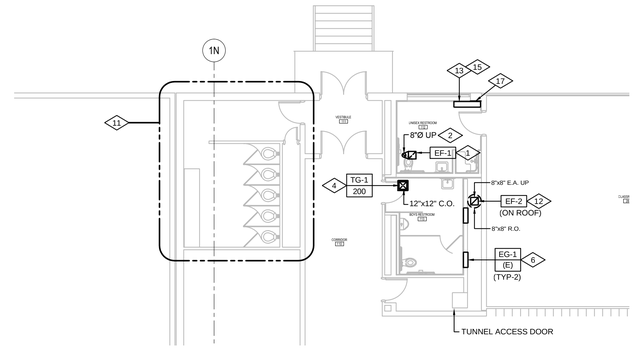

BOYS RESTROOM MECHANICAL PLAN

SCALE: 1/8" = 1'-0"

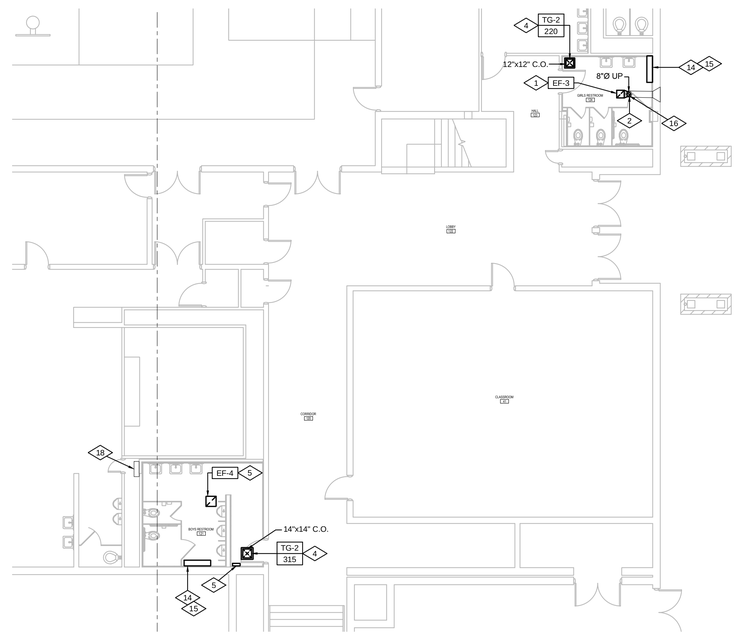

GYM RESTROOM MECHANICAL PLAN

SCALE: 1/8" = 1'-0"

REFERENCE NOTES

1. INSTALL CEILING MOUNTED EXHAUST FAN IN THIS LOCATION. SEE INSTALLATION DETAIL 1/M5.01
2. EXTEND E.A. DUCT OF SIZE INDICATED UP THRU ATTIC TO ROOF. CUT EXISTING ROOF AS NEEDED. TERMINATE EXHAUST DUCT ABOVE ROOF WITH MANUFACTURERS STANDARD ROOF CAP. PATCH AND REPAIR ROOF OPENING TO MATCH EXISTING.
3. EXISTING CABINET UNIT HEATER TO BE REMOVED AND RE-INSTALLED TO FACILITATE NEW TILE FLOORING. VERIFY PROPER OPERATION OF THE CABINET UNIT HEATER AFTER RE-INSTALLATION. NOTIFY OWNER OF ANY DEFICIENCIES.
4. INSTALL T.A. GRILLE. REFER TO ARCHITECTURAL REFLECTED CEILING PLANS FOR EXACT LOCATION. (TYP)
5. INSTALL CEILING MOUNTED EXHAUST FAN IN THIS LOCATION. RECONNECT NEW EXHAUST DUCT TO EXISTING DUCTWORK ABOVE CEILING.
6. INSTALL NEW 16"x8" WALL MOUNTED EXHAUST AIR GRILLE AT EXISTING EXHAUST AIR DUCT OPENING.
7. INSTALL NEW CEILING MOUNTED ELECTRIC RADIANT PANELS AS INDICATED. PROVIDE OPERATION AND SERVICE CLEARANCES PER MANUFACTURERS INSTALLATION INSTRUCTIONS. SEE INSTALLATION DETAIL 3/M5.01
8. THERMOSTAT. MOUNT 54 INCHES A.F.F. MAKE ALL REQUIRED CONNECTIONS FOR A COMPLETE AND FUNCTIONAL TEMPERATURE CONTROL SYSTEM.
9. ALL TEMPERATURE CONTROL WIRING INSIDE WALLS SHALL BE INSTALLED IN EMT CONDUIT. TEMPERATURE CONTROL WIRING ABOVE CEILING MAY BE PLENUM RATED CABLE.
10. EXISTING CABINET UNIT HEATER. NO WORK REQUIRED.
11. NO MECHANICAL WORK REQUIRED IN THIS AREA.
12. INSTALL ROOF MOUNTED EXHAUST FAN IN THIS LOCATION. SEE INSTALLATION DETAIL 4/M5.01.
13. RELOCATE EXISTING CABINET UNIT HEATER TO THIS LOCATION. COORDINATE LOCATION OF CABINET UNIT HEATER WITH NEW DOOR OPENING AND DOOR SWING. RE-MAKE ALL HEATING HOT WATER SUPPLY AND RETURN CONNECTIONS.
14. RELOCATE EXISTING CABINET UNIT HEATER TO THIS LOCATION. COORDINATE LOCATION OF CABINET UNIT HEATER WITH NEW PLUMBING FIXTURES. RE-MAKE ALL HEATING HOT WATER SUPPLY AND RETURN CONNECTIONS.
15. ACCESS HEATING HOT WATER SUPPLY AND RETURN PIPING IN UTILITY TUNNEL OR CHASE. REMOVE AND RE-PIPE SUPPLY AND RETURN PIPING AS NEEDED TO MATCH RELOCATION OF CABINET UNIT HEATER. CONCEAL ALL PIPING.
16. CONNECT NEW EXHAUST FAN DUCT TO EXISTING EXHAUST DUCT.
17. CAP WALL LOUVER IN THIS LOCATION.
18. RELOCATE EXISTING ATC CONTROL PANEL TO THIS LOCATION. MOUNT CONTROL PANEL 7'-0" ABOVE FINISHED FLOOR.

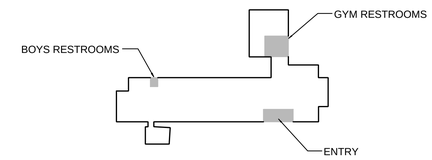

OLSEN & PETERSON
consulting engineers, inc.
14 East 2700 South, Salt Lake City, UT 84115
Phone: (801) 486-4848 Fax: (801) 467-2531

MHTN
ARCHITECTS
MHTN Architects, Inc.
420 East South Temple
Suite 100
Salt Lake City, Utah 84111
Telephone (801) 595-6700
Telefax (801) 595-6717
www.mhtn.com

OGDEN SCHOOL DISTRICT

HIGHLAND JUNIOR HIGH SCHOOL REMODEL
325 GRAMERCY AVE.
OGDEN, UTAH 84404

©2011 MHTN ARCHITECTS, INC.
Drawings, written material, and design concepts shall not be used or reproduced in whole or in part without the express written and written consent of MHTN Architects, Inc. Do not scale drawings. Use given dimensions only. If not shown, verify correct dimensions with the Architect. Contractor shall check and verify all dimensions and conditions at job site.

SEAL

MHTN PROJECT NO. 2015505

DRAWN BY: STAFF CHECKED BY: PWL

ISSUED:

NO.	DATE	DESCRIPTION

CONTRACTOR TO VERIFY DRAWINGS IN FIELD USE REFLECT LAST REVISION DATE.

NO.	DATE	DESCRIPTION

SHEET NAME

MECHANICAL PLANS

CONSTRUCTION DOCUMENTS
APRIL 15, 2015

SHEET NUMBER

M1.02

T:\15051 - Highland JHS Remodel\Drawings\Architectural\A15_2015505_OSD Highland JHS remodel_Central.rvt
3/11/2015 9:50:05 AM

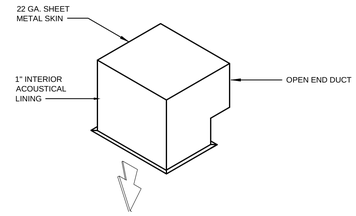

TRANSFER AIR DUCT DETAIL (2 / M5.01)

NOT TO SCALE

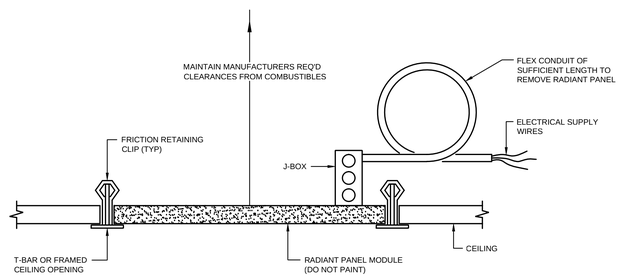

ELECTRIC RADIANT CEILING PANEL INSTALLATION DETAIL (3 / M5.01)

NOT TO SCALE

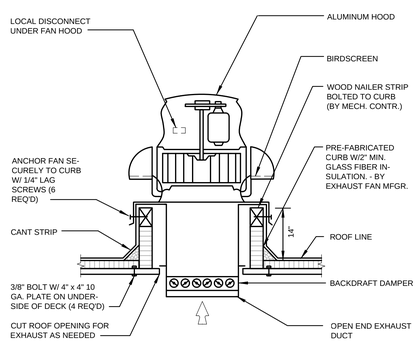

ROOF MOUNTED EXHAUST FAN DETAIL (4 / M5.01)

NOT TO SCALE

8-100

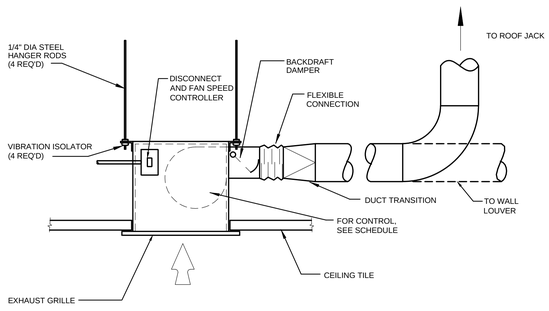

CEILING EXHAUST FAN DETAIL (1 / M5.01)

NOT TO SCALE

ELECTRIC RADIANT HEATING PANEL SCHEDULE

SYMBOL	SIZE	WATTS HEATING CAPACITY	BTUH OUTPUT	AMPS	VOLTAGE	WEIGHT (LBS)	MAKE & MODEL
RP-1	24" x 48"	750	2560	4.8	208/1/60	15	PRESTYL PR - 4824 - 208 (1)

NOTES:

(1) PANEL SHALL BE COMPLETE WITH RECESSED CEILING MOUNTING FRAME AND J - BOX.

EXHAUST FAN SCHEDULE

SYMBOL	TYPE	C.F.M	S.P.	R.P.M.	MOTOR	DRIVE	SONES (MAX)	CONTROL	MAKE & MODEL
EF-1	CEILING	150	0.25	1125	100 WATTS 120/1/60	DIRECT	3.4	OCCUPANCY SENSOR	COOK GC - 164 (1)
EF-2	ROOF MOUNTED	200	0.375	1265	62 WATTS 120/1/60	DIRECT	5	OCCUPANCY SENSOR	COOK GN - 184 (2)
EF-3	CEILING	220	0.25	1395	150 WATTS 120/1/60	DIRECT	2.3	OCCUPANCY SENSOR	COOK GC - 184 (1)
EF-4	CEILING	315	0.25	1167	125 WATTS 120/1/60	DIRECT	4.9	OCCUPANCY SENSOR	COOK GC - 520 (1)
EF-5	ROOF MOUNTED	1000	0.25	1136	1/4 H.P. 120/1/60	BELT	7.1	OCCUPANCY SENSOR	COOK 120 ACEB (2)

NOTES:

(1) FAN TO BE INSTALLED COMPLETE WITH BACKDRAFT DAMPER, PRE-WIRED ELECTRICAL DISCONNECT SWITCH, FAN SPEED CONTROL, TIME DELAY AND ALUMINUM GRILLE

(2) FAN TO BE INSTALLED COMPLETE WITH 14" HIGH INSULATED ROOF CURB, BACKDRAFT DAMPER, PRE-WIRED ELECTRICAL DISCONNECT SWITCH, FAN SPEED CONTROL AND BIRD SCREEN

REGISTER & GRILLE SCHEDULE

SYMBOL	NECK SIZE	LOCATION	TYPE	MAKE & MODEL
EG-1 (E)	16" x 8"	WALL	EXHAUST	PRICE 535 (1)
TG-1 CFM	12" x 12"	CEILING	TRANSFER AIR	PRICE 535 (2)
TG-2 CFM	12"x12"	CEILING	TRANSFER AIR	PRICE 535
TG-3 CFM	14"x14"	CEILING	TRANSFER AIR	PRICE 535

NOTES:

(1) GRILLE TO HAVE BRIGHT WHITE POWDER COATED FINISH

(2) GRILLE TO HAVE BRIGHT WHITE POWDER COATED FINISH AND ADJUSTABLE BALANCING DAMPER

OLSEN & PETERSON
consulting engineers, inc.
74 East 2700 South, Salt Lake City, UT 84115
Phone: (801) 486-4846 Fax: (801) 467-2151

MHTN ARCHITECTS
MHTN Architects, Inc.
420 East South Temple
Suite 100
Salt Lake City, Utah 84111
Telephone (801) 595-6700
Telefax (801) 595-6717
www.mhtn.com

OGDEN SCHOOL DISTRICT
Empowering Excellence Through Education

OGDEN SCHOOL DISTRICT
HIGHLAND JUNIOR HIGH SCHOOL REMODEL
325 GRAMERCY AVE.
OGDEN, UTAH 84404

©2011 MHTN ARCHITECTS, INC.
Drawings, written material, and design concepts shall not be used or reproduced in whole or part in any form or format without prior written consent of MHTN Architects, Inc. Do not scale drawings. Use given dimensions only. If not shown, verify correct dimensions with the Architect. Contractor shall check and verify all dimensions and conditions at job site.

SEAL

MHTN PROJECT NO. 2015505

DRAWN BY: STAFF CHECKED BY: PWL

ISSUED:

NO.	DATE	DESCRIPTION

CONTRACTOR TO VERIFY DRAWINGS IN FIELD USE REFLECT LAST REVISION DATE.

NO.	DATE	DESCRIPTION

SHEET NAME

MECHANICAL SCHED. & DETAILS

CONSTRUCTION DOCUMENTS
APRIL 15, 2015

SHEET NUMBER

M5.01

T:\15051 - Highland JHS Remodel\Drawings\Architectural\A15_2015505_OSD Highland JHS remodel_Central.rvt
3/11/2015 9:50:05 AM

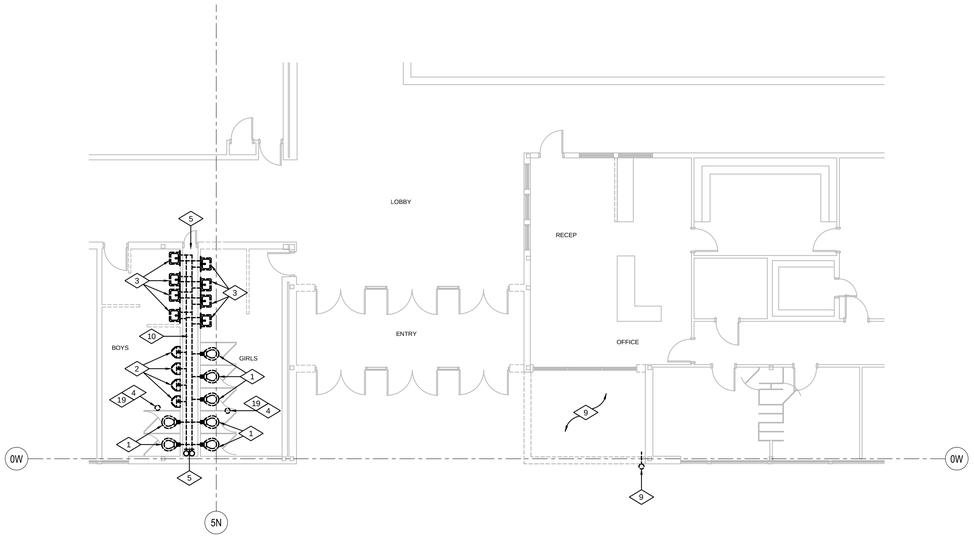

ENTRY AREA RESTROOM PLUMBING DEMOLITION PLAN

SCALE: 1/8" = 1'-0"

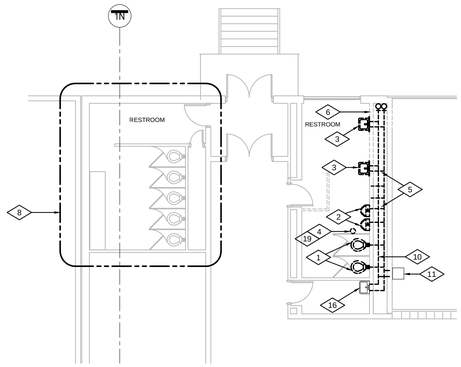

BOYS RESTROOM PLUMBING DEMOLITION PLAN

SCALE: 1/8" = 1'-0"

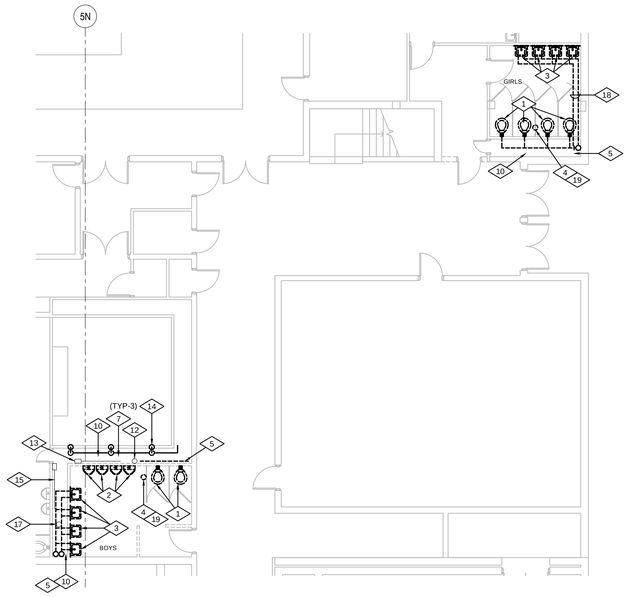

GYM RESTROOMS PLUMBING DEMOLITION PLAN

SCALE: 1/8" = 1'-0"

MECHANICAL DEMOLITION NOTES

1. REMOVE EXISTING WALL MOUNTED WATER CLOSET. REMOVE ASSOCIATED CLOSET SUPPORT AND PIPING. REMOVE FLUSH VALVE. REMOVE WATER LINE BACK TO MAIN. SEE DRAWING P1.02 FOR NEW PLUMBING WORK.
2. REMOVE EXISTING WALL MOUNTED URINAL. REMOVE ASSOCIATED URINAL SUPPORT AND PIPING. REMOVE FLUSH VALVE. REMOVE WATER LINE BACK TO MAIN. SEE DRAWING P1.02 FOR NEW PLUMBING WORK.
3. REMOVE AND SALVAGE EXISTING WALL MOUNTED LAVATORY AND FAUCET. REMOVE ASSOCIATED LAVATORY SUPPORT AND PIPING. SALVAGE LAVATORY AND FAUCET TO OWNER. SEE DRAWING P1.02 FOR NEW PLUMBING WORK.
4. REMOVE EXISTING FLOOR DRAIN. EXISTING DRAIN PIPING BELOW SLAB TO REMAIN INTACT FOR NEW FLOOR DRAIN CONNECTION. SEE DRAWING P1.02 FOR NEW FLOOR DRAIN LOCATION.
5. REMOVE ALL GALVANIZED WATER PIPING FROM PLUMBING CHASE THAT IS ASSOCIATED WITH THIS RESTROOM REMODEL. REMOVE PIPING BACK TO MAINS. SEE DRAWING P1.02 FOR NEW COPPER PIPING REQUIRED.
6. REMOVE EXISTING HOSE BIBB. REMOVE ALL ASSOCIATED PIPING.
7. EXISTING PLUMBING CHASE TO BE DEMOLISHED. REMOVE AND RELOCATE ALL ASSOCIATED WATER, WASTE, VENT AND DRAIN PIPING. VENT THROUGH ROOF TO REMAIN INTACT.
8. GIRLS RESTROOM N.I.C. NO PLUMBING DEMOLITION WORK REQUIRED IN THIS AREA.
9. REMOVE EXISTING IRRIGATION PIPING IN PLANTING BED. REMOVE ALL WATER AND DRAIN LINES. REMOVE WATER LINE BACK TO MAIN INSIDE THE BUILDING AND CAP.
10. REMOVE ALL EXISTING WASTE AND VENT LINES. MODIFY WASTE LINE AS NEEDED TO ACCOMMODATE NEW PLUMBING FIXTURES.
11. EXISTING CLASSROOM SINK TO REMAIN.
12. REMOVE EXISTING 4" WASTE STACK. SAWCUT FLOOR AS NEEDED. 4" VTR TO REMAIN. PATCH CONCRETE TO MATCH EXISTING.
13. REMOVE EXISTING FLUSHOMETER FLUSHING SYSTEM. REMOVE ALL ASSOCIATED PIPING, CONTROLS AND VALVES.
14. RE-PIPE EXISTING SHOWER PIPING. RE-PIPE WATER LINES TIGHT TO WALL. PREPARE AREA IN GENERAL FOR NEW PLUMBING WALL.
15. EXISTING FLUSHOMETER SYSTEM SERVING LOCKER ROOM URINALS TO REMAIN INTACT.
16. EXISTING MOP SINK TO REMAIN INTACT.
17. EXISTING WASTE STACK TO REMAIN INTACT.
18. REMOVE HW & CW PIPING SERVING EXISTING LAVATORIES.
19. SAWCUT FLOOR AS NEEDED FOR NEW FLOOR DRAIN LOCATION. PATCH FLOOR WITH 4" BASE AND 4" SLAB TO MATCH EXISTING.

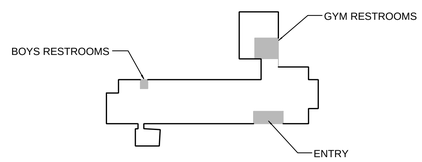

OLSEN & PETERSON
consulting engineers, inc.
1 East 2700 South, Salt Lake City, UT 84115
Phone: (801) 486-4848 Fax: (801) 467-2531

MHTN
ARCHITECTS
MHTN Architects, Inc.
420 East South Temple
Suite 100
Salt Lake City, Utah 84111
Telephone (801) 595-6700
Telefax (801) 595-6717
www.mhtn.com

OGDEN SCHOOL DISTRICT
Empowering Excellence Through Education

OGDEN SCHOOL DISTRICT
HIGHLAND JUNIOR HIGH SCHOOL REMODEL
325 GRAMERCY AVE.
OGDEN, UTAH 84404

©2011 MHTN ARCHITECTS, INC.
Drawings, written material, and design concepts shall not be used or reproduced in whole or part in any form or format without prior written consent of MHTN Architects, Inc. Do not scale drawings. Use given dimensions only. If not shown, verify correct dimensions with the Architect. Contractor shall check and verify all dimensions and conditions at job site.

SEAL

MHTN PROJECT NO. 2015505

DRAWN BY: STAFF CHECKED BY: PWL

ISSUED:

NO.	DATE	DESCRIPTION

CONTRACTOR TO VERIFY DRAWINGS IN FIELD USE REFLECT LAST REVISION DATE.

NO.	DATE	DESCRIPTION

SHEET NAME

PLUMBING DEMO PLANS

CONSTRUCTION DOCUMENTS
APRIL 15, 2015

SHEET NUMBER

PD1.02

T:\15051 - Highland JHS Remodel\Drawings\Architectural\A15_2015505_OSD Highland JrHS remodel_Central.rvt
3/11/2015 9:50:05 AM

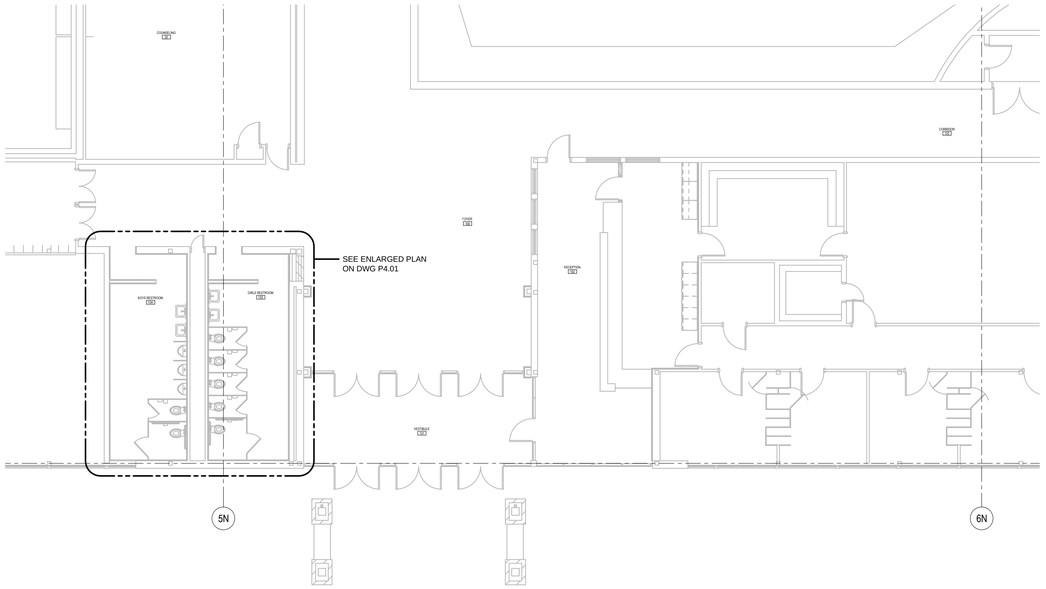

ENTRY AREA RESTROOM PLUMBING PLAN

SCALE: 1/8" = 1'-0"

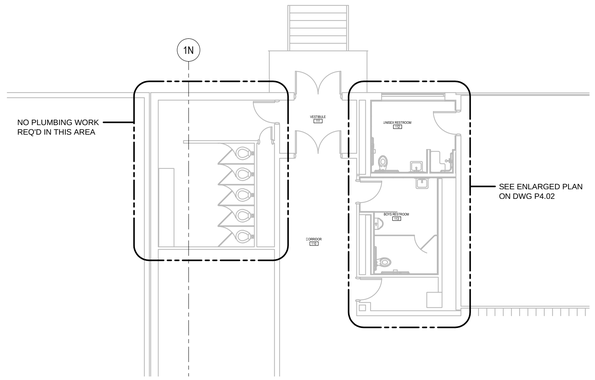

BOYS RESTROOM PLUMBING PLAN

SCALE: 1/8" = 1'-0"

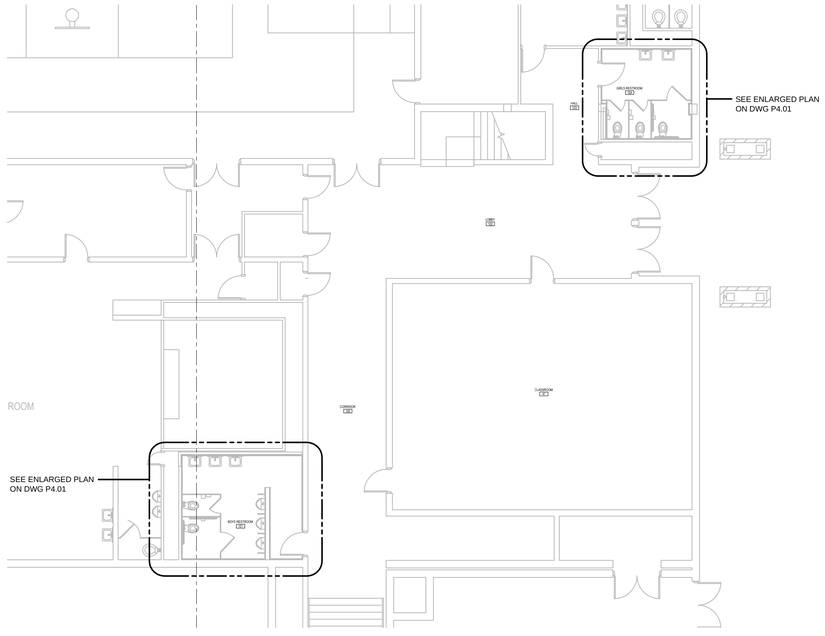

GYM RESTROOMS PLUMBING PLAN

SCALE: 1/8" = 1'-0"

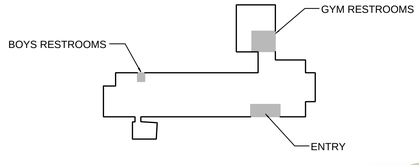

MHTN
ARCHITECTS
MHTN Architects, Inc.
420 East South Temple
Suite 100
Salt Lake City, Utah 84111
Telephone (801) 595-6700
Telefax (801) 595-6717
www.mhtn.com

OGDEN SCHOOL DISTRICT
Empowering Excellence Through Education

OGDEN SCHOOL DISTRICT
HIGHLAND JUNIOR HIGH SCHOOL
REMODEL
325 GRAMERCY AVE.
OGDEN, UTAH 84404

©2011 MHTN ARCHITECTS, INC.
Drawings, written material, and design concepts shall not be used or reproduced in whole or in part without the express written and written consent of MHTN Architects, Inc. Do not scale drawings. Use given dimensions only. If not shown, verify correct dimensions with the Architect. Contractor shall check and verify all dimensions and conditions at job site.

SEAL

REGISTERED PROFESSIONAL ENGINEER
PAUL W. LAIRD
STATE OF UTAH

MHTN PROJECT NO. 2015505

DRAWN BY: STAFF CHECKED BY: PWL

ISSUED:

NO.	DATE	DESCRIPTION

CONTRACTOR TO VERIFY DRAWINGS IN FIELD USE REFLECT LAST REVISION DATE.

NO.	DATE	DESCRIPTION

SHEET NAME

PLUMBING PLANS

CONSTRUCTION DOCUMENTS
APRIL 15, 2015

SHEET NUMBER

P1.02

OLSEN & PETERSON
consulting engineers, inc.
14 East 2700 South, Salt Lake City, UT 84115
Phone: (801) 486-4646 Fax: (801) 467-2531

T:\15051 - Highland JHS Remodel\Drawings\Architectural\A15_2015505_OSD Highland JHS remodel_Central.rvt
3/11/2015 9:50:05 AM

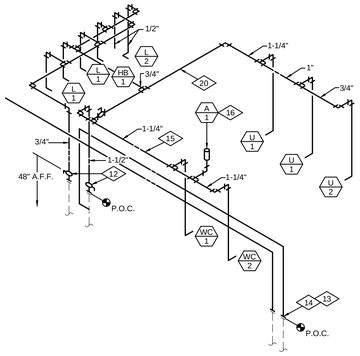

BOY'S RESTROOM - WATER PIPING ISOMETRIC

NOT TO SCALE

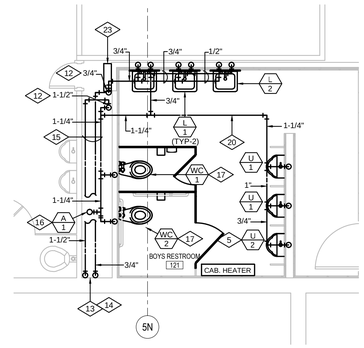

BOY'S RESTROOM - WATER SUPPLY PLAN

SCALE: 1/4" = 1'-0"

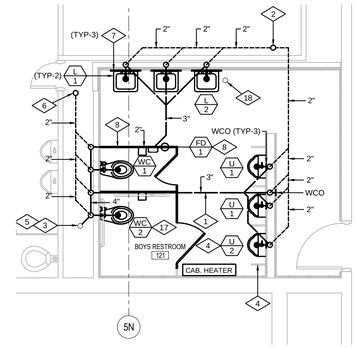

BOY'S RESTROOM -DWV PLAN

SCALE: 1/4" = 1'-0"

REFERENCE NOTES

1. SAWCUT EXISTING FLOOR AND INSTALL NEW 3 INCH WASTE LINE BELOW SLAB. EXTEND 3 INCH WASTE LINE AND CONNECT TO NEW URINALS. PATCH FLOOR TO MATCH EXISTING.
2. FIELD VERIFY EXISTING VENT THROUGH ROOF LOCATION. REMAKE ALL REQUIRED VENT CONNECTIONS.
3. CONNECT NEW 4 INCH WASTE LINE FROM NEW PLUMBING FIXTURES TO EXISTING 4 INCH WASTE LINE IN THIS LOCATION.
4. INSTALL URINALS ON NEW WALL CARRIERS. MAKE ALL WASTE AND VENT CONNECTIONS. (TYP)
5. FIELD VERIFY LOCATION OF EXISTING 4 INCH WASTE LINE.
6. CONNECT 2 INCH VENT LINE FROM PLUMBING FIXTURES TO EXISTING VENT LINE. REMAKE ALL REQUIRED VENT CONNECTIONS.
7. INSTALL LAVATORY IN THIS LOCATION. PROVIDE NEW BRACING AND CARRIER ARMS AS NEEDED. (TYP)
8. SAWCUT FLOOR AND INSTALL NEW FLOOR DRAIN IN THIS LOCATION. EXTEND NEW WASTE LINE FROM FLOOR DRAIN AND CONNECT TO EXISTING FLOOR DRAIN PIPING AS INDICATED.
9. PROVIDE 4 INCH STANDPIPE CLEANOUTS. EXTEND CLEANOUTS UP 24 INCHES ABOVE FINISHED FLOOR. CAP WITH RUBBER PIPE CAP AND BAND CLAMP.
10. CONNECT NEW 4 INCH WASTE LINE TO EXISTING 4 INCH WASTE LINE IN CHASE. PROVIDE PROPER GRADE OF NEW LINE TO EXISTING.
11. INSTALL NEW FLOOR DRAIN. RELOCATE FLOOR DRAIN PIPING TO THIS LOCATION. PATCH FLOOR TO MATCH EXISTING.
12. INSTALL BALL ISOLATION VALVES ON HOT AND COLD WATER MAINS. LOCATE VALVES NEAR PLUMBING CHASE ACCESS DOOR. MOUNT VALVES 60 INCHES A.F.F.
13. LOCATE EXISTING HOT AND COLD WATER PIPING IN UTILITY TUNNEL BELOW.
14. PROVIDE DI-ELECTRIC UNION AT INTERFACE OF COPPER AND GALVANIZED PIPING.
15. RUN PIPING HIGH IN CHASE. MAINTAIN 7'-0" CLEARANCE FROM BOTTOM OF PIPING TO FLOOR.
16. INSTALL WATER HAMMER ARRESTOR IN THIS LOCATION.
17. INSTALL WATER CLOSETS ON NEW CHAIR CARRIERS. MAKE ALL WASTE AND VENT CONNECTIONS.
18. CAP ABANDONED WASTE LINE IN WALL.
19. RECONNECT TO EXISTING LAVATORY WASTE LINE IN THIS LOCATION.
20. RUN NEW PIPING ABOVE NEW CEILING.
21. CONNECT HOT AND COLD WATER PIPING TO NEW LAVATORY FAUCET.
22. INSTALL HOSE BIBB CONCEALED UNDER LAVATORY. MOUNT 24" A.F.F.
23. COORDINATE LOCATION OF NEW PIPING WITH RELOCATED AIR HANDLER CONTROL PANEL.

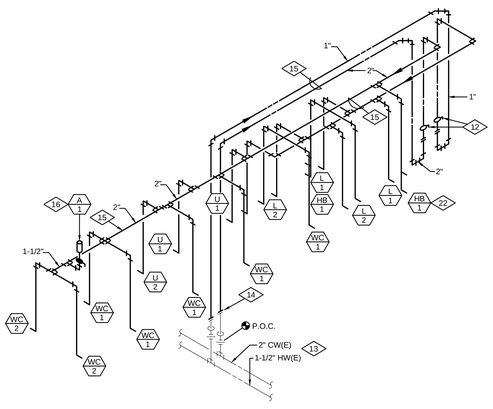

ENTRY RESTROOM - WATER PIPING ISOMETRIC

NOT TO SCALE

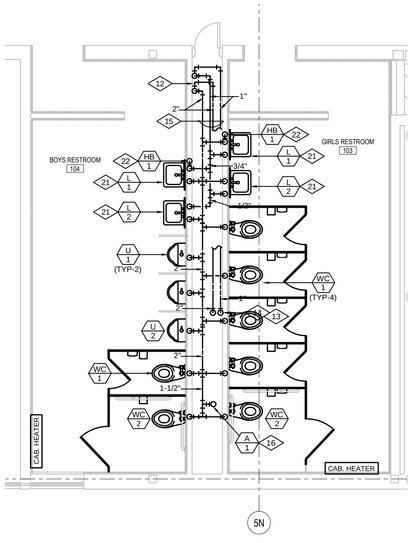

ENTRY RESTROOM - WATER SUPPLY PLAN

SCALE: 1/4" = 1'-0"

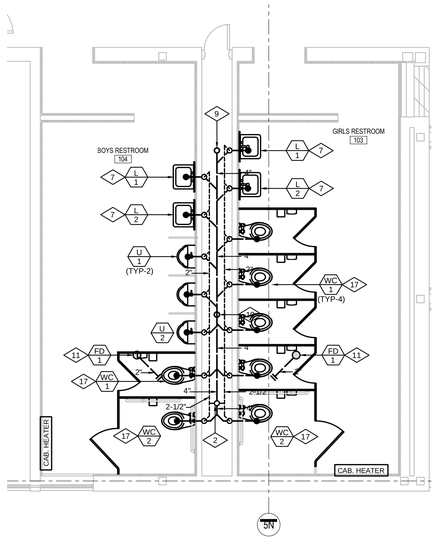

ENTRY RESTROOM - DWV PLAN

SCALE: 1/4" = 1'-0"

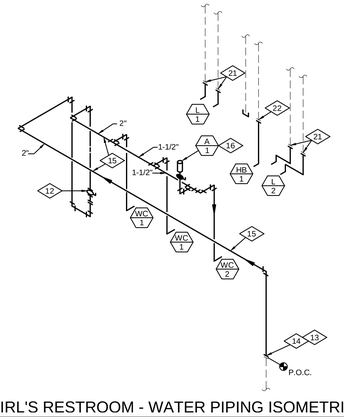

GIRL'S RESTROOM - WATER PIPING ISOMETRIC

NOT TO SCALE

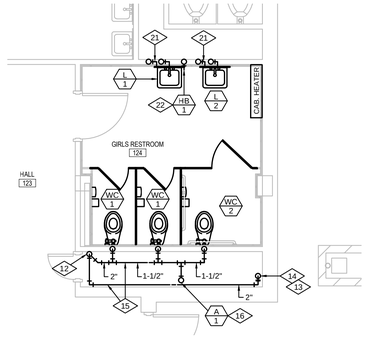

GIRL'S RESTROOM - WATER SUPPLY PLAN

SCALE: 1/4" = 1'-0"

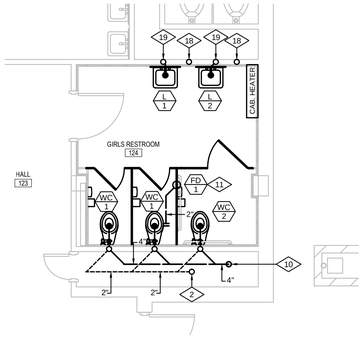

GIRL'S RESTROOM - DWV PLAN

SCALE: 1/4" = 1'-0"

MHTN ARCHITECTS
MHTN Architects, Inc.
420 East South Temple
Suite 100
Salt Lake City, Utah 84111
Telephone (801) 595-6700
Telefax (801) 595-6717
www.mhtn.com

OGDEN SCHOOL DISTRICT
Empowering Excellence Through Education

OGDEN SCHOOL DISTRICT

HIGHLAND AND JUNIOR HIGH SCHOOL REMODEL

325 GRAMERCY AVE.
OGDEN, UTAH 84404

©2011 MHTN ARCHITECTS, INC.
Drawings, written material, and design concepts shall not be used or reproduced in whole or part in any form or format without prior written consent of MHTN Architects, Inc. Do not scale drawings. Use given dimensions only. If not shown, verify correct dimensions with the Architect. Contractor shall check and verify all dimensions and conditions at job site.

SEAL

MHTN PROJECT NO. 2015505

DRAWN BY: STAFF CHECKED BY: PWL

ISSUED:

NO.	DATE	DESCRIPTION

CONTRACTOR TO VERIFY DRAWINGS IN FIELD USE REFLECT LAST REVISION DATE.

NO.	DATE	DESCRIPTION

SHEET NAME

ENLARGED PLUMBING PLANS

CONSTRUCTION DOCUMENTS
APRIL 15, 2015

SHEET NUMBER

P4.01

OLSEN & PETERSON
consulting engineers, inc.
14 East 2700 South, Salt Lake City, UT 84115
Phone: (801) 486-4848 Fax: (801) 467-2531

T:\15051 -- Highland JHS Remodel\Drawings\Architectural\A15_2015505_OSD Highland JHS remodel_Central.rvt
3/11/2015 9:50:05 AM

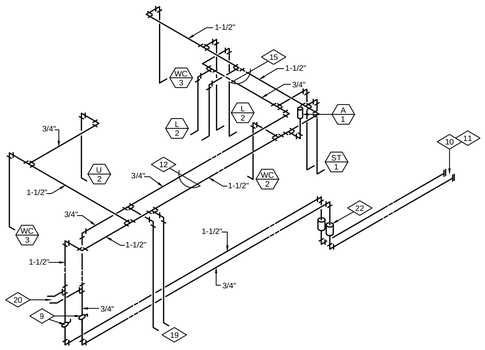

BOY'S RESTROOM - WATER PIPING ISOMETRIC

NOT TO SCALE

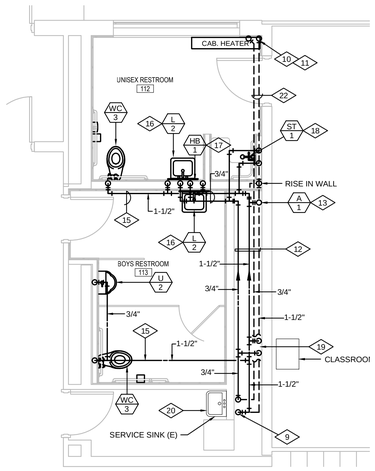

BOY'S RESTROOM - WATER SUPPLY PLAN

SCALE: 1/4" = 1'-0"

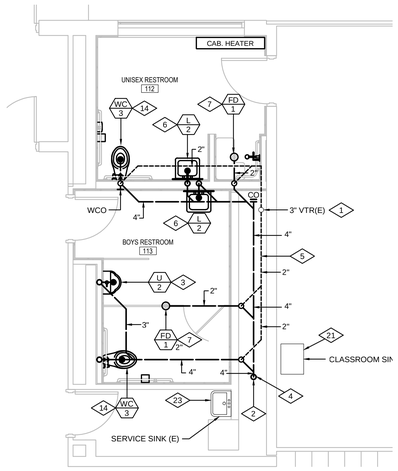

BOY'S RESTROOM - DWV PLAN

SCALE: 1/4" = 1'-0"

REFERENCE NOTES

1. FIELD VERIFY EXITING VENT THROUGH ROOF LOCATION. REMAKE ALL REQUIRED VENT CONNECTIONS.
2. CONNECT NEW 4 INCH WASTE LINE FROM NEW PLUMBING FIXTURES TO EXISTING 4 INCH WASTE LINE IN THIS LOCATION.
3. INSTALL URINAL ON NEW WALL CARRIER. MAKE ALL WASTE AND VENT CONNECTIONS.
4. FIELD VERIFY LOCATION OF EXISTING 4 INCH WASTE LINE.
5. CONNECT 2 INCH VENT LINE FROM PLUMBING FIXTURES TO EXISTING VENT LINE. REMAKE ALL REQUIRED VENT CONNECTIONS.
6. INSTALL LAVATORY IN THIS LOCATION. PROVIDE NEW WALL BRACING AND CARRIER ARMS AS NEEDED.
7. SAWCUT FLOOR AND INSTALL NEW FLOOR DRAIN IN THIS LOCATION. EXTEND NEW WASTE LINE FROM FLOOR DRAIN AND CONNECT TO WASTE PIPING AS INDICATED.
8. INSTALL NEW FLOOR DRAIN. RELOCATE FLOOR DRAIN PIPING TO THIS LOCATION.
9. INSTALL BALL ISOLATION VALVES ON HOT AND COLD WATER MAINS. LOCATE VALVES NEAR PLUMBING CHASE ACCESS DOOR. MOUNT VALVES 60 INCHES A.F.F.
10. LOCATE EXISTING HOT AND COLD WATER PIPING IN UTILITY TUNNEL BELOW.
11. PROVIDE DI-ELECTRIC UNION.
12. RUN PIPING HIGH IN CHASE.
13. INSTALL WATER HAMMER ARRESTOR IN THIS LOCATION.
14. INSTALL NEW FLOOR MOUNTED WATER CLOSET IN THIS LOCATION. MAKE ALL WASTE AND VENT CONNECTIONS.
15. RUN NEW PIPING ABOVE NEW CEILING.
16. CONNECT HOT AND COLD WATER PIPING TO NEW LAVATORY FAUCET.
17. INSTALL HOSE BIBB CONCEALED UNDER LAVATORY. MOUNT 24" A.F.F.
18. INSTALL NEW SHOWER IN THIS LOCATION. INSTALL HAND HELD SHOWER WITH QUICK DISCONNECT.
19. RE-PIPE EXISTING CLASSROOM SINK. REMAKE ALL WATER, WASTE AND VENT CONNECTION.
20. RE-PIPE 1/2" HW AND 1/2" CW LINES TO EXISTING SERVICE SINK FAUCET.
21. PIPE NEW WASTE AND VENT LINES TO EXISTING SERVICE SINK.
22. RUN NEW 1-1/2" CW AND 3/4" HW IN TUNNEL SPACE TO NEW WALL. RISE IN NEW WALL TO RUN INSIDE EXISTING PLUMBING CHASE.
23. RE-PIPE WASTE AND VENT LINES FROM EXISTING SERVICE SINK TO NEW WASTE AND VENT LINES

MHTN ARCHITECTS
MHTN Architects, Inc.
420 East South Temple
Suite 100
Salt Lake City, Utah 84111
Telephone (801) 595-6700
Telefax (801) 595-6717
www.mhtn.com

OGDEN SCHOOL DISTRICT
Empowering Excellence Through Education

OGDEN SCHOOL DISTRICT
HIGHLAND JUNIOR HIGH SCHOOL REMODEL
325 GRAMERCY AVE.
OGDEN, UTAH 84404

©2011 MHTN ARCHITECTS, INC.
Drawings, written material, and design concepts shall not be used or reproduced in whole or part in any form or format without prior written consent of MHTN Architects, Inc. Do not scale drawings. Use given dimensions only. If not shown, verify correct dimensions with the Architect. Contractor shall check and verify all dimensions and conditions at job site.

SEAL

MHTN PROJECT NO. 2015505

DRAWN BY: STAFF CHECKED BY: PWL

ISSUED:

NO.	DATE	DESCRIPTION

CONTRACTOR TO VERIFY DRAWINGS IN FIELD USE REFLECT LAST REVISION DATE.

NO.	DATE	DESCRIPTION

SHEET NAME

ENLARGED PLUMBING PLANS

CONSTRUCTION DOCUMENTS
APRIL 15, 2015

SHEET NUMBER

P4.02

OLSEN & PETERSON
consulting engineers, inc.
14 East 2700 South, Salt Lake City, UT 84115
Phone: (801) 486-4848 Fax: (801) 467-2531

T:\15051 - Highland JHS Remodel\Drawings\Architectural\A15_2015505_OSD Highland JHS remodel_Central.rvt
3/11/2015 9:50:05 AM

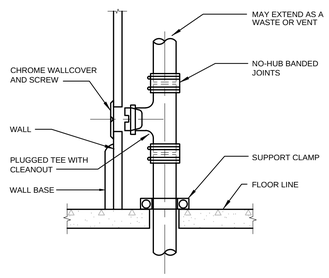

WALL CLEANOUT DETAIL

5 / P5.01

NOT TO SCALE

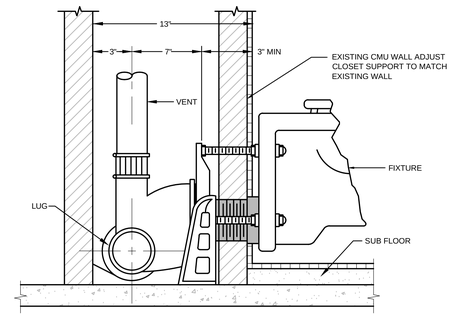

WATER CLOSET SUPPORT DETAIL

2 / P5.01

NOT TO SCALE 14-142

PLUMBING FIXTURE SCHEDULE

SYMBOL	FIXTURE	WASTE	VENT	C.W.	H.W.	NOTES
WC 1	WALL MOUNTED WATER CLOSET	4"	2"	1-1/4"	--	WALL MOUNTED FLUSH VALVE TYPE WITH CHAIR CARRIER
WC 2	WALL MOUNTED WATER CLOSET - ADA	4"	2"	1-1/4"	--	ADA - WALL MOUNTED FLUSH VALVE TYPE WITH CHAIR CARRIER
WC 3	FLOOR MOUNTED WATER CLOSET - ADA	4"	2"	1-1/4"	--	ADA - FLOOR MOUNTED FLUSH VALVE TYPE
U 1	WALL MOUNTED URINAL	3"	2"	3/4"	--	WALL MOUNTED FLUSH VALVE TYPE WITH FLOOR SUPPORT CARRIER
U 2	WALL MOUNTED URINAL - ADA	3"	2"	3/4"	--	ADA - WALL MOUNTED FLUSH VALVE TYPE WITH FLOOR SUPPORT CARRIER
L 1	WALL MOUNTED LAVATORY	1-1/2"	1-1/2"	1/2"	1/2"	WALL MOUNTED WITH CONCEALED ARMS FLOOR CARRIER
L 2	WALL MOUNTED LAVATORY - ADA	1-1/2"	1-1/2"	1/2"	1/2"	ADA - WALL MOUNTED WITH CONCEALED ARMS FLOOR CARRIER
ST 1	SHOWER TRIM - ADA	2"	2"	1/2"	1/2"	ADA - SHOWER CONTROL VALVE WITH HAND HELD SHOWER AND DIVERTING VALVE
HB 1	HOSE BIBB	--	--	3/4"	--	WALL MTD UNDER LAVATORY
FD 1	FLOOR DRAIN	2"	2"	--	--	WITH DEEP SEAL P-TRAP AND 'PROSET' TRAP GUARD
A 1	ARRESTOR	--	--	1"	--	1" BELLOWS TYPE

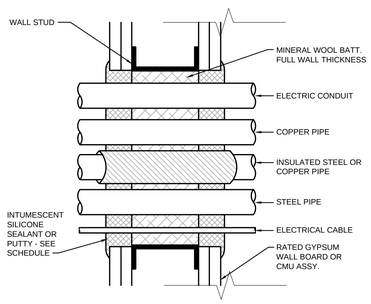

WALL RATING	DEPTH OF SEALANT	SEALANT CROWN
1 HR	1"	1/4"
2 HR	1-1/4"	3/8"
3 HR	1-1/2"	1/2"

PIPE & CONDUIT FIRE STOP DETAIL

6 / P5.01

NOT TO SCALE

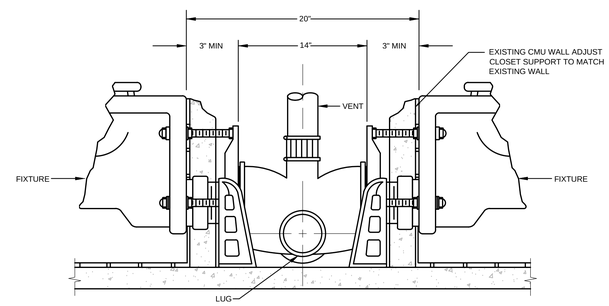

WATER CLOSET SUPPORT DETAIL

3 / P5.01

NOT TO SCALE

BRANCH WATER LINE SIZING TABLE

FIXTURE	FIXTURE UNITS	TOTAL FIXTURES SERVED BY GIVEN PIPE SIZE					
		1/2"	3/4"	1"	1-1/4"	1-1/2"	2"
WATER CLOSET FLUSH VALVE	40	0	0	0	1	2	10
URINAL FLUSH VALVE	5	0	1	3	4	10	20
LAVATORY	2	1	2	4	10	20	40
SHOWER	4	1	2	3	6	12	24
HOSE BIBB	5	0	1	2	3	4	6
TOTAL FIXTURE UNITS CONNECTED TO PIPE		5	10	30	60	160	200

15-121

PLUMBING PIPING LEGEND

DESCRIPTION	SYMBOL
WASTE	
VENT	
COLD WATER (NON-SOFTENED)	
HOT WATER	

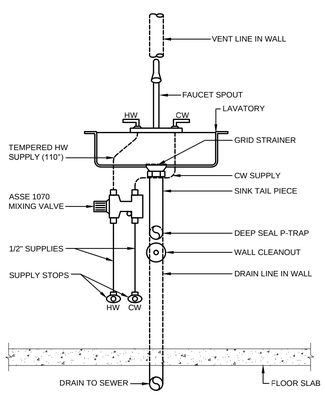

LAVATORY INSTALLATION DETAIL

7 / P5.01

NOT TO SCALE

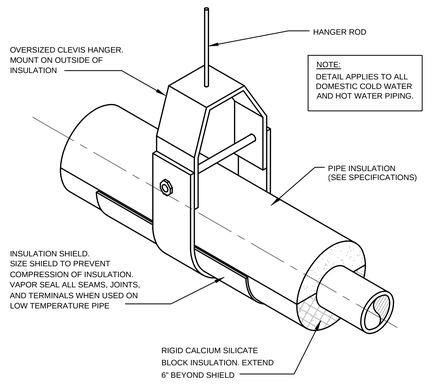

PIPE SUPPORT DETAIL

4 / P5.01

NOT TO SCALE 20-109

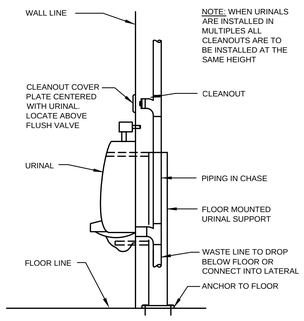

CLEANOUT AT URINAL DETAIL

1 / P5.01

NOT TO SCALE 14-109

MHTN ARCHITECTS
MHTN Architects, Inc.
420 East South Temple
Suite 100
Salt Lake City, Utah 84111
Telephone (801) 595-6700
Telefax (801) 595-6717
www.mhtn.com

OGDEN SCHOOL DISTRICT
Empowering Excellence Through Education

OGDEN SCHOOL DISTRICT
HIGHLAND JUNIOR HIGH SCHOOL REMODEL
325 GRAMERCY AVE.
OGDEN, UTAH 84404

©2011 MHTN ARCHITECTS, INC.
Drawings, written material, and design concepts shall not be used or reproduced in whole or part in any form or format without prior written consent of MHTN Architects, Inc. Do not scale drawings. Use given dimensions only. If not shown, verify correct dimensions with the Architect. Contractor shall check and verify all dimensions and conditions at job site.

SEAL

REGISTERED PROFESSIONAL ENGINEER
PAUL W. LAIRD
STATE OF UTAH

MHTN PROJECT NO: 2015505

DRAWN BY: STAFF CHECKED BY: PWL

ISSUED:

NO.	DATE	DESCRIPTION

CONTRACTOR TO VERIFY DRAWINGS IN FIELD USE REFLECT LAST REVISION DATE.

NO.	DATE	DESCRIPTION

SHEET NAME

PLUMBING SCHED. & DETAILS

CONSTRUCTION DOCUMENTS
APRIL 15, 2015

SHEET NUMBER

P5.01

OLSEN & PETERSON
consulting engineers, inc.
14 East 2700 South, Salt Lake City, UT 84115
Phone: (801) 486-4848 Fax: (801) 467-2531

T:\15051 -- Highland JHS Remodel\Drawings\Architectural\A15_2015505_OSD Highland JHS remodel_Central.rvt
3/17/2015 9:50:05 AM

MHTN ARCHITECTS
MHTN Architects, Inc.
420 East South Temple
Suite 100
Salt Lake City, Utah 84111
Telephone (801) 595-6700
Telefax (801) 595-6717
www.mhtn.com

OGDEN SCHOOL DISTRICT
Empowering Excellence Through Education

BNA CONSULTING
SALT LAKE ST.GEORGE
635 South State Street
Salt Lake City, Utah 84111
P:801.532.2196
F:801.532.2305
www.bnaconsulting.com

© 2015 BNA CONSULTING

FIXTURE SCHEDULE

TYPE	DESCRIPTION	MANFR.	MODEL	CAT No.	VOLTS	LAMP #	LAMP	TEMP
B2	LOW PROFILE 2'X2' TROFFER LED RECESSED LUMINARIE; WHITE ALUMINUM HOUSING; FROSTED WHITE DIFFUSER; DRYWALL KIT; 60,000 HOUR (L80); 5 YR WARRANTY; 0-10 DIMMING; 3000L @ 80+ CRI/4000K; INPUT WATTS = 32	PHILIPS OPTIMUM		OETL WD 22 03L UV 840 FMA14	120 V	1	LED	4000 K
B2E	LOW PROFILE 2'X2' TROFFER LED RECESSED LUMINARIE; WHITE ALUMINUM HOUSING; FROSTED WHITE DIFFUSER; DRYWALL KIT; 60,000 HOUR (L80); 5 YR WARRANTY; 0-10 DIMMING; 3000L @ 80+ CRI/4000K; FACTORY INSTALLED EMERGENCY BATTERY PACK; INPUT WATTS = 32	PHILIPS OPTIMUM		OETL WD 22 03L UV 840 FMA14	120 V	1	LED	4000 K
B3	LOW PROFILE 2'X2' TROFFER LED RECESSED LUMINARIE; WHITE ALUMINUM HOUSING; FROSTED WHITE DIFFUSER; DRYWALL KIT; 60,000 HOUR (L80); 5 YR WARRANTY; 0-10 DIMMING; 4000L @ 80+ CRI/4000K; INPUT WATTS = 40	PHILIPS OPTIMUM		OETL WD 22 04L UV 840 FMA14	120 V	1	LED	4000 K
B3E	LOW PROFILE 2'X2' TROFFER LED RECESSED LUMINARIE; WHITE ALUMINUM HOUSING; FROSTED WHITE DIFFUSER; DRYWALL KIT; 60,000 HOUR (L80); 5 YR WARRANTY; 0-10 DIMMING; 4000L @ 80+ CRI/4000K; FACTORY INSTALLED EMERGENCY BATTERY PACK; INPUT WATTS = 40	PHILIPS OPTIMUM		OETL WD 22 04L UV 840 FMA14	120 V	1	LED	4000 K
C1	LOW PROFILE 1'X4' TROFFER LED RECESSED LUMINARIE; WHITE ALUMINUM HOUSING; FROSTED WHITE DIFFUSER; DRYWALL KIT; 60,000 HOUR (L80); 5 YR WARRANTY; 0-10 DIMMING; 3000L @ 80+ CRI/4000K; INPUT WATTS = 32	PHILIPS OPTIMUM	OETL	OETL WD 14 03L UV 840 FMA14	120 V	1	LED	4000 K
C1E	LOW PROFILE 1'X4' TROFFER LED RECESSED LUMINARIE; WHITE ALUMINUM HOUSING; FROSTED WHITE DIFFUSER; DRYWALL KIT; 60,000 HOUR (L80); 5 YR WARRANTY; 0-10 DIMMING; 3000L @ 80+ CRI/4000K; FACTORY INSTALLED EMERGENCY BATTERY PACK; INPUT WATTS = 32	PHILIPS OPTIMUM	OETL	OETL WD 14 03L UV 840 E(2700) FMA14	120 V	1	LED	4000 K
O1E	LOW-PROFILE SURFACE MOUNT LED LUMINAIRE; MARINE GRADE DIE-CAST ALUMINUM HOUSING; INTEGRAL PHOTOCELL UV-STABILIZED, HIGH IMPACT MOLDED LENS; IP64;5 YR WARRANTY+PoMG; FACTORY INSTALLED BATTERY BACKUP; 1355L @ 4000K; INPUT WATTS = 20; PROVIDE REQUIRED MOUNTING HARDWARE FOR MOUNTING TO EXISTING	KENALL	MR13	MR13FL-PP-SCBA-20L40K-DCC-DV-LEL-BPC-SA	120 V	1	LED	4000 K
OF1	DESIGNER LED 7" FLOODLIGHT; INTEGRAL CUTOFF HOOD DOOR; HORIZONTAL SPOT OPTICAL DISTRIBUTION; 200,000 HOUR (L70)5 YR WARRANTY; 4000L @ 4000K; INPUT WATTS = 35; PROVIDE REQUIRED MOUNTING HARDWARE FOR MOUNTING EXTERIOR LIGHT POLE; AIM ACCORDINGLY	PHILIPS GARCO	DFC7	DFC7-DIM-SIDE POLE MOUNT-HSP-35LA-NW-UNV-SCBA	120 V	1	LED	4000 K
OP1	LUMINAIRE = AREA LED SITE LUMINARIE; DIE-CAST ALUMINUM HOUSING; PHILIPS LUMILEDS LUXEON LED MODULES; TYPE III DISTRIBUTION; DARK-SKY ASSOCIATION; 100,000 HOUR (L70); 5 YR WARRANTY; 0-10 DIMMING; 15,697L @ 80+ CRI/4000K, INPUT WATTS = 137 POLE = 18' ROUND TAPERED ALUMINUM POLE w/VIBRATION DAMPENING; 90 MPH w/1.3 GUST @ 4.8 EPA; SINGLE ARM HORIZONTAL 18" MOUNT LUMINARIE MOUNTING	PHILIPS LUMEC	ROADFOCUS	RFL-145W64LED4K-T-R3M-UNIV-DMG-SCBA+R-170830505T4-D1-P(1HT90)-SCBA-w/VIBRATION DAMPENING	120 V	1	LED	4000 K
OP2	LUMINAIRE = AREA LED SITE LUMINARIE; DIE-CAST ALUMINUM HOUSING; PHILIPS LUMILEDS LUXEON LED MODULES; TYPE II DISTRIBUTION; DARK-SKY ASSOCIATION; 100,000 HOUR (L70); 5 YR WARRANTY; 0-10 DIMMING; 15,697L @ 80+ CRI/4000K, INPUT WATTS = 137 POLE = 18' ROUND TAPERED ALUMINUM POLE w/VIBRATION DAMPENING; 90 MPH w/1.3 GUST @ 4.8 EPA; SINGLE ARM HORIZONTAL 18" MOUNT LUMINARIE MOUNTING	PHILIPS LUMEC	ROADFOCUS	RFL-145W64LED4K-T-R2M-UNIV-DMG-SCBA+R-170830505T4-D1-P(1HT90)-SCBA-w/VIBRATION DAMPENING	120 V	1	LED	4000 K
OW1	WALL MOUNTED EXTERIOR LED LUMINARIE; LOW COPPER DIE-CAST ALUMINUM; POWDER COATED; 15° UP/DOWN DISTRIBUTION; RAL COLOR BY ARCHITECT 50,000 HOUR (L50); 80+ CRI; 5 YR WARRANTY; 0-10 DIMMING; 2 X 2880L @ 4000K; INPUT WATTS = 2 X 26W	BETA-CALCO	TORRE	830 8271 CCBA	120 V	1	LED	4000 K
P1	PENDANT MOUNTED DECORATIVE LED LUMINARIE; INJECTION MOLDED CLEAR ACRYLIC WITH AN ETCHED LOWER BAND; ALUMINUM, FROSTED FINISH WITH VERTICAL FACETS; 50,000 HOUR (L50); 80+ CRI; 5 YR WARRANTY; 0-10 DIMMING; 2419L @ 4000K; INPUT WATTS = 30	BETA-CALCO	KIORA	44 1203	120 V	1	LED	4000 K
V1E	4' VANDAL RESISTANT LOW PROFILE LED LINEAR LUMINAIRE;HIGH IMPACT POLYCARBONATE LENS; SOLID REFLECTOR; 50,000 HOUR (L70);5YR WARRANTY; 3200L @ 4000K COLOR TEMP; INPUT WATTS = 45	PHILIPS DAY-BRITE	VRD-1020	LPLS4L45-40K-UNV-F1-EM	120 V	1	LED	4000 K
WL1	WALL MOUNTED LINEAR INDIRECT LED LUMINARIE; EXTRUDED ALUMINUM HOUSING; WET LABELED; CLEAR LENS; ASYMMETRIC DISTRIBUTION; MOUNTED TO CANOPY SUPPORT FRAME; EXACT COLOR SELECTION BY ARCHITECT; 60,000 HOUR (L70); 5 YR WARRANTY; 0-10 DIMMING; 600L/FT @ 80+ CRI/4000K; INPUT WATTS = 90	ALIGHT	D4	D4-G18'-LS-40-U-N-CLEAR-M3-CCBA-D-E	120 V	1	LED	4000 K
WL2	WALL MOUNTED LINEAR INDIRECT LED LUMINARIE; EXTRUDED ALUMINUM HOUSING; WET LABELED; CLEAR LENS; SYMMETRIC DISTRIBUTION; MOUNTED TO CANOPY SUPPORT FRAME; EXACT COLOR SELECTION BY ARCHITECT; 60,000 HOUR (L70); 5 YR WARRANTY; 0-10 DIMMING; 600L/FT @ 80+ CRI/4000K; INPUT WATTS = 60; FACTORY INSTALLED EMERGENCY BATTERY PACKS	ALIGHT	D4	D4-G12'-LS-40-U-M-CLEAR-M3-CCBA-D-E	120 V	1	LED	4000 K
X1	UNIVERSAL EDGE-LIT EXIT SIGN; BRUSHED ALUMINUM HOUSING AND BLACK PLASTIC END-CAPS, WITH HIGH GRADE ACRYLIC PANEL; UNIVERSAL MOUNT, SURFACE, RECESSED OR END-MOUNT; SELF-POWERED	EMERGI-LITE	TOTAL EDGE	PNG6	120 V	1	LED	5000 K

LIGHT FIXTURE ABBREVIATION SCHEDULE

NOTE: NOT ALL ABBREVIATIONS WILL NECESSARILY BE USED.

A.F.F.	ABOVE FINISH FLOOR
WALL@CLG	WALL MOUNT AT CORNER OF WALL AND CEILING
CCBA	CUSTOM PAINTED COLOR AS SELECTED BY THE ARCHITECT
SCBA	STANDARD PAINTED COLOR AS SELECTED BY THE ARCHITECT
CFBA	CUSTOM FINISH AS SELECTED BY THE ARCHITECT
SFBA	STANDARD FINISH AS SELECTED BY THE ARCHITECT
MOD	MODIFY STANDARD LIGHT FIXTURE AS INDICATED

LIGHT FIXTURE GENERAL NOTES

1. REFER TO THE ARCHITECTURAL REFLECTED CEILING PLANS FOR LOCATIONS OF LIGHT FIXTURES. BRING ALL DISCREPANCIES OF LOCATIONS AND QUANTITIES TO THE ATTENTION OF THE ARCHITECT AND ELECTRICAL ENGINEER PRIOR TO BIDDING.
2. REFER TO ARCHITECTURAL ELEVATIONS FOR MOUNTING HEIGHTS AND LOCATIONS OF LIGHT FIXTURES. BRING ALL DISCREPANCIES TO THE ATTENTION OF THE ARCHITECT PRIOR TO BIDDING.
3. REFER TO THE SPECIFICATIONS FOR OTHER LIGHT FIXTURE, FUSING, BALLAST, AND LAMP REQUIREMENTS AND ACCEPTABLE MANUFACTURERS.
4. REFER TO ARCHITECTURAL DRAWINGS AND SPECIFICATIONS FOR LOUVER REQUIREMENTS AS REQUIRED.
5. CONFIRM AVAILABLE MOUNTING DEPTHS OF ALL LIGHT FIXTURES AND COMPARE WITH DEPTHS SHOWN ON SHOP DRAWINGS. BRING ALL POTENTIAL CONFLICT AREAS TO THE ATTENTION OF THE ARCHITECT AND ELECTRICAL ENGINEER PRIOR TO RELEASE.

BIDDING REQUIREMENTS

1. BID ONLY PRODUCTS THAT ARE SPECIFIED OR APPROVED BY ADDENDUM.
2. PACKAGING OF LIGHT FIXTURES WITH OTHER SYSTEMS IS NOT ALLOWED.
3. WHEN ONLY ONE PRODUCT IS APPROVED FOR BIDDING, THE PRICE FOR THAT ITEM SHALL BE BROKEN OUT SEPARATELY WHEN SUBMITTING PRICING TO VARIOUS DISTRIBUTORS AND/OR CONTRACTORS.
4. WHEN A CONTRADICTION EXISTS BETWEEN A SPECIFIC MODEL NUMBER AND THE DESCRIPTION, THE DESCRIPTION SHALL GOVERN.

PRIOR APPROVAL REQUIREMENTS

1. PRIOR APPROVAL IS REQUIRED BEFORE BIDDING THIS PROJECT.
2. PRIOR APPROVALS SHALL BE SUBMITTED TO THE ELECTRICAL ENGINEER'S OFFICE AT LEAST (8) EIGHT WORKING DAYS BEFORE THE BID. PRIOR APPROVALS RECEIVED AFTER THIS TIME PERIOD SHALL BE REJECTED.
3. PRIOR APPROVALS SHALL BE SIGNED BY A PRINCIPAL OF THE SUBMITTING ORGANIZATION STATING THAT THEY HAVE PREPARED AND/OR REVIEWED THE SUBMITTAL AND THAT THE PRODUCTS PROPOSED ARE EQUIVALENT TO THOSE SPECIFIED. ANY EXCEPTIONS SHALL BE SO NOTED.
4. ITEMS THAT ARE SUBMITTED AND HAVE BEEN APPROVED WILL BE LISTED IN THE ADDENDUM(S). VERBAL APPROVAL WILL NOT BE GIVEN ON ANY ITEM.
5. IT IS NOT THE RESPONSIBILITY OF THE ELECTRICAL ENGINEER TO NOTIFY THE SUBMITTING PARTY OF ERRORS IN THE SUBMITTAL. NOTIFICATION OF ERRORS BY THE ELECTRICAL ENGINEER PRIOR TO ISSUANCE OF THE ADDENDUM(S) MAY NOT BE GIVEN.
6. PRIOR APPROVALS SHALL CONSIST OF TWO SETS OF CUT SHEETS DESCRIBING THE PRODUCTS BEING SUBMITTED AS EQUIVALENTS. FAXES ARE NOT ACCEPTABLE. ALL SPECIFICATION INFORMATION SHALL BE CLEARLY MARKED, WITH NON-APPLICABLE INFORMATION CROSSED OUT. COMPLETE PHOTOMETRIC DATA SHALL BE PROVIDED. PRODUCTS WITHOUT PHOTOMETRIC DATA WILL NOT BE APPROVED.
7. SUPPLY POINT-BY-POINTS AS REQUIRED BY THE ELECTRICAL ENGINEER AND/OR LIGHTING DESIGNER.
8. SAMPLE FIXTURES MUST BE SUPPLIED WITH A CORD, PLUG AND 120V BALLAST.

LIGHTING SHOP DRAWING REQUIREMENTS

1. REFER TO SPECIFICATIONS 26 0500, 26 5100 & 26 5600.
2. MUST INCLUDE BALLAST AND LAMP CUT SHEETS.
3. LINEAR LIGHTING MUST INCLUDE DETAILED DRAWINGS WITH SUPPORT DETAILS, STEM LOCATIONS AND HAVE ALL LENGTHS IDENTIFIED WITH STEM LOCATIONS.
4. COLOR SAMPLES MUST BE INCLUDED IN FIRST SUBMITTAL.
5. CUT SHEETS MUST BE STAMPED WITH THE FACTORY REPRESENTATIVE'S COMPANY NAME.
6. VALUE ENGINEERING CONDUCTED WITHOUT THE DESIGN TEAM IE; ARCHITECT, OWNER, ENGINEER & LIGHTING CONSULTANT/DESIGNER WILL NOT BE ALLOWED, REVIEWED OR APPROVED.
7. PROVIDE A LIST OF SPARE PARTS, EQUIPMENT & LAMPS.

ELECTRICAL SYMBOL SCHEDULE

1. SEE FIXTURE SCHEDULE FOR TYPE, MOUNTING AND WATTAGE.
2. HEIGHT MEASURED TO CENTER LINE OF THE BOX FROM THE FINISH FLOOR.
3. REFER TO DRAWINGS FOR DIRECTIONAL ARROWS.
4. SUBSCRIPT KEYS SWITCH TO FIXTURES CONTROLLED.
5. NEMA TYPE 'ND' NON-FUSED UNLESS NOTED 'F' (FUSED). USE 'HD' 480 V.
6. HEIGHT TO BE THE LOWER OF EITHER 80" A.F.F. OR 6" BELOW CEILING.
7. PROVIDE H.O.A. AND S.S. PUSHBUTTONS AS REQUIRED.
8. DOUBLE ARROWS DENOTE A DOUBLE FACE UNIT.
9. COORDINATE WITH MILLWORK SHOP DRAWINGS AND ELEVATIONS FOR HEIGHT.
10. SUBSCRIPT DENOTES NEMA CONFIGURATION.
11. HEIGHT MEASURED TO BOTTOM OF THE BOX FROM FINISH FLOOR.
12. COORDINATE WITH DOOR HARDWARE SUPPLIER.

STANDARD MOUNTING HEIGHT UNLESS OTHERWISE NOTED ON PLANS

SYMBOL	DESCRIPTION	MOUNTING HEIGHT	NOTES
	ONE CIRCUIT, HOME RUN TO PANEL		
	2 CIRCUIT, HOME RUN TO PANEL		
	3 CIRCUIT, HOME RUN TO PANEL		
	CONDUIT RUN CONCEALED IN WALL OR CEILING		
	CONDUIT RUN CONCEALED IN FLOOR OR GROUND		
	CONDUIT UP		
	CONDUIT DOWN		
	CONDUIT STUB LOCATION	CAP CONDUIT	
	CONDUIT/CIRCUIT CONTINUATION		
	CEILING LIGHT FIXTURE	CEILING	1.
	WALL LIGHT FIXTURE	AS NOTED	1.
	RECESSED DOWNLIGHT FIXTURE	CEILING	1.
	RECESSED WALLWASH DOWNLIGHT FIXTURE	CEILING	1.
	FLUORESCENT LIGHT FIXTURE	AS NOTED	1
	FLUORESCENT EGRESS LIGHT FIXTURE	AS NOTED	UNSWITCHED
	AREA LIGHT POLE AND FIXTURE	CONCRETE BASE	SEE DIAGRAM
	FLOOD OR TRACK FIXTURE	AS NOTED	
	CEILING/WALL MOUNTED EXIT LIGHT	CEILING/ AS NOTED	1.3.8.
^{x}	SINGLE POLE SWITCH	+4'-0"	4. 2.
	SINGLE GANG LV LIGHTING CONTROL WITH MULTIPLE BUTTONS	+4'-0"	2.
	CEILING/WALL MOUNTED OCCUPANCY SENSOR SUBSCIPT A=ANALOG, D = DIGITAL	CEILING/ +4'-0"	2.
PP	POWER PACK	CEILING	SEE DIAGRAM, SPEC.
RC	DIGITAL ROOM CONTROLLER	CEILING	SEE DIAGRAM, SPEC.
P	PHOTO-ELECTRIC CONTROL	AS NOTED	
	DIGITAL DAYLIGHT SENSOR	CEILING	SEE DIAGRAM, SPECIFICATION
	DUPLEX RECEPTACLE	+16" OR AS NOTED	9. 11.
A	DUPLEX RECEPTACLE		9.
WP	WEATHERPROOF RECEPTACLE	+24" OR AS NOTED	2. 9.
	GROUND FAULT INTERRUPTER DUPLEX RECEPTACLE	+16" OR AS NOTED	9. 11.
	FOURPLEX RECEPTACLE	+16" OR AS NOTED	9. 11.
	DATA OUTLET, TWO CABLES	+16" OR AS NOTED	9. 11.

SYMBOL	DESCRIPTION	MOUNTING HEIGHT	NOTES
J	JUNCTION BOX ('F' IN FLOOR)	AS NOTED	
	MOTOR OUTLET	TO SUIT EQUIP.	
F	FUSED DISCONNECT SWITCH	+5'-0"	5.
^{T}	MANUAL STARTER THERMAL OVERLOAD SWITCH WITH PILOT LIGHT	+4'-0"	2.
	PANEL BOARD	TOP AT +6'-0"	
	MAIN DISTRIBUTION PANEL		
F	FIRE ALARM MANUAL STATION	+4'-0"	2.
H	FIRE ALARM SIGNAL HORN/STROBE (L = LOW FREQUENCY)	+6'-8"	6.
S	FIRE ALARM STROBE (L = LOW FREQUENCY)	+6'-8"	6.
S	SMOKE DETECTOR	CEILING	
H	HEAT DETECTOR	CEILING	
R	FIRE ALARM RELAY OR SECURITY RELAY		MTD. IN DUCT
CM	FIRE ALARM CONTROL MODULE		
MM	FIRE ALARM MONITOR MODULE		
D	SECURITY SYSTEM DOOR SWITCH	DOOR JAMB	
M	SECURITY MOTION DETECTOR		MOUNT AS PER. MFR.
ES	ELECTRIC DOOR STRIKE		
	CAMERA	AS NOTED	
A	LIGHT FIXTURE (LETTER DESIGNATES TYPE)		
EQ 34	EQUIPMENT NUMBER		
842	ARCHITECTURAL ROOM NUMBER		
	ALUMINUM RACEWAY (PLUGMOLD)		SEE ARCH, MOUNT. DETAIL. 9.
	PUSHBUTTON	AS NOTED	2.

GENERAL NOTES

1. CONSULT ARCHITECTURAL REFLECTED CEILING PLANS FOR EXACT LOCATION OF ALL LIGHTING FIXTURES.
2. VERIFY ALL EQUIPMENT DIMENSIONS AND LOCATIONS BEFORE BEGINNING ROUGH IN. CONSULT ALL APPLICABLE CONTRACT DRAWINGS AND SHOP DRAWINGS TO INSURE NEC CODE CLEARANCES REQUIRED AROUND ALL ELECTRICAL EQUIPMENT.
3. CONTRACTOR SHALL VERIFY ALL ELECTRICAL LOADS (VOLTAGE, PHASE, CONNECTION REQUIREMENTS, ETC) OF ALL EQUIPMENT FURNISHED UNDER ALL DIVISIONS, INCLUDING ALL EXISTING EQUIPMENT TO BE RE-USED. REVIEW ALL SHOP DRAWINGS AND EXISTING EQUIPMENT BEFORE BEGINNING ROUGH-IN.
4. SEE SECTION 26 5100 OF THE SPECIFICATION FOR REQUIRED COORDINATION MEETINGS WITH MECHANICAL AND CEILING CONTRACTORS.
5. SEE APPLICABLE SHOP DRAWINGS FOR ROUGH IN LOCATION OF ALL EQUIPMENT, WIRING DEVICES, ETC. WHERE APPLICABLE MOUNT ALL WIRING DEVICES ABOVE BACK SPLASH EXCEPT THOSE SERVING UNDER COUNTER EQUIPMENT.
6. SEE SPECIFICATION FOR ENERGY SAVING LAMP AND BALLAST REQUIREMENTS.
7. FINISHES OF ALL LIGHT FIXTURES SHALL BE AS SELECTED BY ARCHITECT.
8. THE ELECTRICAL CONTRACTOR SHALL NOTIFY AND COOPERATE WITH THE MECHANICAL CONTRACTOR SUCH THAT NO PIPING, DUCTS, OR EQUIPMENT FOREIGN TO THE OPERATION OF THE ELECTRICAL EQUIPMENT SHALL BE PERMITTED TO BE INSTALLED IN, ENTER OR PASS THRU ELECTRICAL ROOMS OR SPACES, OR ABOVE OR BELOW ELECTRICAL EQUIPMENT IN OTHER AREAS.
9. ELECTRICAL BOXES SHALL NOT BE LOCATED IN MASONRY COLUMNS IN BRICK WALLS OR IN GROUTED CELLS ADJACENT TO OPENINGS. COORDINATE LOCATION OF BOXES WITH MASONRY CONTRACTOR.
10. ALL PENETRATIONS OF FIRE RATED FLOORS, WALLS, AND CEILINGS SHALL BE SEALED WITH APPROVED MATERIAL TO MAINTAIN FIRE RATING OF SURFACE PENETRATED.
11. CIRCUITS EXTENDING OVER 70' FOR 120 VOLT AND 115' FOR 277 VOLT 20 AMP CIRCUITS SHALL BE RUN WITH CONDUCTORS PER TABLE BELOW.

20 AMP MINIMUM BRANCH CIRCUIT CONDUCTOR SIZING		
MAXIMUM LENGTH	BRANCH CIRCUIT VOLTAGE	
CONDUCTOR LENGTH (FT)	120 VOLT	277 VOLT
<70	MIN. #12 AWG	MIN. #12 AWG
70 - 115	MIN. #10 AWG	MIN. #12 AWG
115 - 170	MIN. #8 AWG	MIN. #10 AWG
170 - 270	MIN. #6 AWG	MIN. #8 AWG
271 - 380	NOTE B	MIN. #8 AWG
>380	NOTE B	NOTE B

A. THESE ARE BASED ON MAXIMUM LENGTH OF CIRCUIT.
B. PERFORM VOLTAGE DROP CALCULATIONS AND PROVIDE CONDUCTOR SIZE TO KEEP BRANCH CIRCUIT VOLTAGE DROP LESS THAN 3% WITH A 15 AMP LOAD.
C. CONTRACTOR SHALL ENSURE THAT THE INSTALLATION OF EACH BRANCH CIRCUIT STAYS WITHIN 3% VOLTAGE DROP FOR A 15 AMP LOAD. IF NECESSARY, CONTRACTOR SHALL INCREASE WIRE AND CONDUIT SIZE TO MEET THE STANDARD AT NO ADDITIONAL COST TO OWNER.

SHEET INDEX

E0.01 SYMBOLS, SCHEDULES AND NOTES
E1.00 ELECTRICAL SITE PLAN
E1.01 FIRST FLOOR OVERALL ELECTRICAL PLAN
E3.01 FIRST FLOOR ELECTRICAL PLANS
E4.01 ELECTRICAL DIAGRAMS

DEMOLITION NOTES

1. COORDINATE ALL NEW ELECTRICAL EQUIPMENT REQUIREMENTS AND MAKE CONNECTION TO EXISTING SYSTEMS. THIS INCLUDES LIGHTING, POWER, SIGNAL, RACEWAY AND OTHER SYSTEMS INCLUDED UNDER DIVISION 26 (16).
2. RELOCATE, REWIRE AND/OR RECONNECT EXISTING ELECTRICAL DEVICES AND/OR EQUIPMENT THAT FOR ANY REASON OBSTRUCTS CONSTRUCTION.
3. CONCEAL ALL RACEWAY AND WIRING IN EXISTING WALLS, CEILINGS, FLOORS, ETC. EXCEPT WHERE THE USE OF SURFACE METAL RACEWAYS (E.G. WIRE MOLD) IS INDICATED ON DRAWINGS OR IN SPEC.
4. LEAVE ALL EXISTING EQUIPMENT, IN PORTIONS OF THE BUILDING NOT BEING REMODELED, IN WORKING CONDITION. RESTORE ALL INTERRUPTED BRANCH CIRCUITS, FEEDERS, ETC. TO WORKING CONDITION.
5. EXISTING RACEWAYS MAY BE REUSED (IN PLACE) WHERE POSSIBLE, AND WHERE IN COMPLIANCE WITH THE SPECIFICATIONS AND THE INTENT OF THE CONTRACT DOCUMENTS. INSURE INTEGRITY OF EXISTING RACEWAY BEFORE REUSE.
6. REMOVE ALL RACEWAYS, CONDUCTORS, BOXES, DEVICES, EQUIPMENT, ETC. THAT ARE NOT TO BE REUSED.
7. REMOVE EXISTING LIGHT FIXTURES WHICH ARE NOT TO BE REUSED, PLACE IN CARTON, LABEL APPROPRIATELY, AND RETURN TO OWNER, OR PROPERLY DISPOSE OF FIXTURES THAT THE OWNER CHOOSES NOT TO KEEP.
8. DO NOT PENETRATE STRUCTURAL ELEMENTS OF FLOORS, WALLS, CEILINGS, ROOFS, ETC.
9. DISCONNECT AND RECONNECT ANY/ALL FIXTURES, DEVICES, EQUIPMENT, ETC. REQUIRED FOR PROPER COMPLETION OF THE WORK.
10. COORDINATE ELECTRICAL DEMOLITION WITH THE ENTIRE ARCHITECTURAL DRAWINGS AND GENERAL CONTRACTOR.

OCCUPANCY SENSOR GENERAL NOTES

1. THE ELECTRICAL CONTRACTOR SHALL BE RESPONSIBLE FOR CONTACTING THE SENSOR MANUFACTURER FOR PROPER PLACEMENT AND ADJUSTMENT OF OCCUPANCY SENSORS.
2. EACH ZONE SHALL HAVE COVERAGE BY OCCUPANCY SENSOR SUCH THAT NO BLIND SPOT EXIST.
3. UPON COMPLETION OF THE INSTALLATION, THE SYSTEM SHALL BE COMPLETELY COMMISSIONED BY THE MANUFACTURER'S FACTORY AUTHORIZED TECHNICIAN WHO WILL VERIFY ALL ADJUSTMENTS AND SENSOR PLACEMENT TO ENSURE A TROUBLE FREE INSTALLATION.
4. THE LOCATION AND QUANTITIES OF SENSORS SHOWN ON THE DRAWINGS ARE DIAGRAMMATIC AND INDICATE ONLY THE ROOMS WHICH ARE TO BE PROVIDED WITH SENSORS. THE ELECTRICAL CONTRACTOR SHALL PROVIDE ADDITIONAL SENSORS IF REQUIRED TO PROPERLY COVER THE RESPECTIVE ROOM.

EQUIPMENT SCHEDULE

UNIT	#	DESCRIPTION	LOAD				VOLT	PHASE	FULL LOAD AMPS	CONDUIT SIZE	WIRES				OCPD		REFERENCE NOTES			
			HP	FLA	MCA	VA					SETS	QTY	SIZE	EQUIP. GND.	TYPE	AMPS	STARTER	DISCONNECT	OTHER	REMARKS
EF	1	EXHAUST FAN		0 A	0 A	100 VA	120 V	1	0.8 A	3/4"	1	2	12	12	CB	15 A	4A			
EF	2	EXHAUST FAN		0 A	0 A	100 VA	120 V	1	0.8 A	3/4"	1	2	12	12	CB	15 A	4A			
EF	3	EXHAUST FAN		0 A	0 A	150 VA	120 V	1	1.3 A	3/4"	1	2	12	12	CB	15 A	4A			
EF	4	EXHAUST FAN		0 A	0 A	125 VA	120 V	1	1.0 A	3/4"	1	2	12	12	CB	15 A	4A			
EF	5	EXHAUST FAN	0.25				120 V	1	5.8 A	3/4"	1	2	12	12	CB	15 A	4A			
RP	1	ELECTRIC RADIANT HEATING PANEL		0 A	0 A	1000 VA	208 V	1	4.8 A	3/4"	1	2	12	12	CB	15 A	2A			

NOTES:

1. NON-FUSED DISCONNECT SWITCH
2. FUSED DISCONNECT SWITCH
3. BREAKER ENCLOSURE
4. MANUAL STARTER W/THERMAL OVERLOAD
5. MAGNETIC STARTER
6. MAGNETIC STARTER/ NON-FUSED DISCONNECT COMBINATION
7. MAGNETIC STARTER/ FUSED DISCONNECT COMBINATION
8. MAGNETIC STARTER/ BREAKER COMBINATION
9. VARIABLE FREQUENCY DRIVE
10. REDUCED VOLTAGE STARTER
11. DIRECT CONNECTION
12. RECEPTACLE/SPECIAL PURPOSE OUTLET/ ETC.
13. TWO-SPEED STARTER, COORDINATE W/MOTOR TYPE
14. SOLID STATE SOFT STARTER

A. FURNISHED, INSTALLED, AND CONNECTED UNDER DIVISION 26.
B. FURNISHED AND INSTALLED UNDER ANOTHER DIVISION REQUIRING CONNECTION UNDER DIVISION 28.
C. FURNISHED UNDER ANOTHER DIVISION BUT INSTALLED AND CONNECTION UNDER DIVISION 28.
D. FURNISHED, INSTALLED AND CONNECTED UNDER ANOTHER DIVISION.

CB = CIRCUIT BREAKER - THERMAL MAGNETIC

NOTE 1: PER 250.122(A), EQUIPMENT GROUND IS NOT REQUIRED TO BE LARGER THAN PHASE CONDUCTOR.

OGDEN SCHOOL DISTRICT
HIGHLAND JUNIOR HIGH SCHOOL REMODEL
325 GRAMERCY AVE.
OGDEN, UTAH 84404

©2011 MHTN ARCHITECTS, INC.
Drawings, written material, and design concepts shall not be used or reproduced in whole or part in any form or format without prior written consent of MHTN Architects, Inc. Do not scale drawings. Use given dimensions only. If not shown, verify correct dimensions with the Architect. Contractor shall check and verify all dimensions and conditions at job site.

SEAL

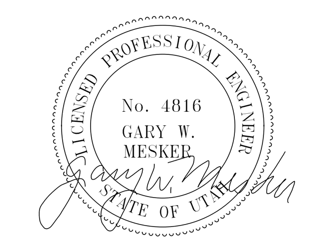

MHTN PROJECT NO. 2015505
DRAWN BY: Author CHECKED BY: Checker

ISSUED:

NO.	DATE	DESCRIPTION

CONTRACTOR TO VERIFY DRAWINGS IN FIELD USE REFLECT LAST REVISION DATE.

NO.	DATE	DESCRIPTION

SHEET NAME
SYMBOLS, SCHEDULES AND NOTES
CONSTRUCTION DOCUMENTS
APRIL 15, 2015

SHEET NUMBER
E0.01

SHEET KEYNOTES

1. ROUTE CONDUIT AND WIRE UNDGERGROUD TO RELAY CONTROL PANEL AS SHOWN. PROVIDE (1) 20A 1 POLE BREAKER WITHIN EXISTING 120/208V 3P PANEL 'B (E)' AND WIRE THE RELAY PANEL TWO RELAYS ACCORDINGLY. CIRCUIT NUMBER FOR REFERENCE ONLY.
2. PROVIDE A RELAY CONTROL PACKAGE (LEVITON RE4DB-104+00LVS-04W-PC) FOR CONTROL OF AREA SITE AND FLAGPOLE LIGHTING. SEE DIAGRAM PXXX/E4.01 FOR MORE REQUIREMENTS. VERIFY EXACT LOCATION OF RELAY PANEL WITH ARCHITECT PRIOR TO ROUGH-IN.

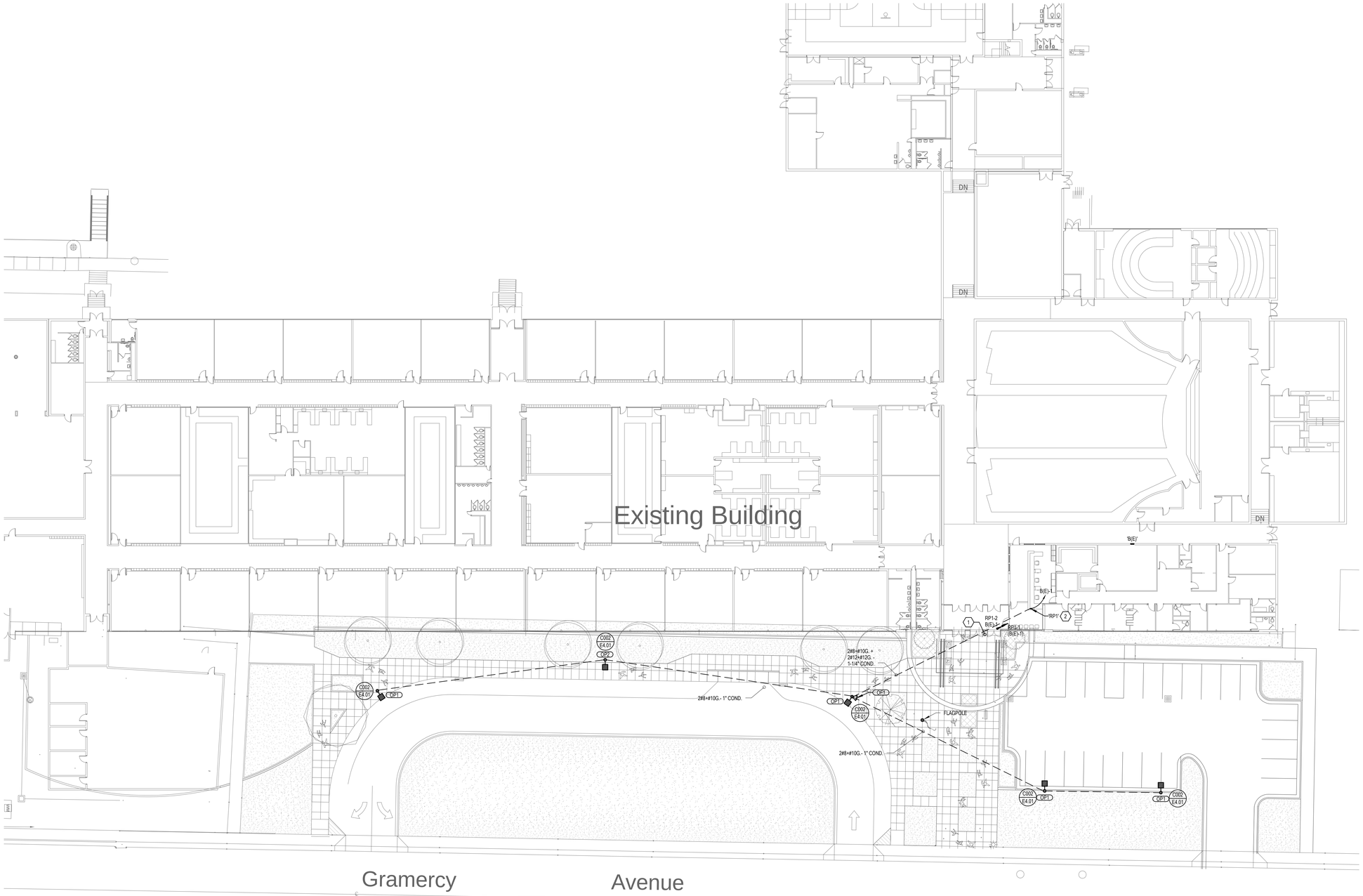

ELECTRICAL SITE PLAN
SCALE = 1" = 20'-0"

MHTN ARCHITECTS
MHTN Architects, Inc.
420 East South Temple
Suite 100
Salt Lake City, Utah 84111
Telephone (801) 595-6700
Telefax (801) 595-6717
www.mhtn.com

OGDEN SCHOOL DISTRICT
Empowering Excellence Through Education

BNA CONSULTING
SALT LAKE ST.GEORGE
635 South State Street
Salt Lake City, Utah 84111
P:801.532.2196
F:801.532.2305
www.bnaconsulting.com

© 2015 BNA CONSULTING

OGDEN SCHOOL DISTRICT
HIGHLAND JUNIOR HIGH SCHOOL REMODEL
325 GRAMERCY AVE.
OGDEN, UTAH 84404

©2011 MHTN ARCHITECTS, INC.
Drawings, written material, and design concepts shall not be used or reproduced in whole or part in any form or format without prior written consent of MHTN Architects, Inc. Do not scale drawings - use only given dimensions only. If not clear, verify correct dimensions with the Architect. Contractor shall check and verify all dimensions and conditions at job site.

SEAL

LICENSED PROFESSIONAL ENGINEER
No. 4816
GARY W. MESKER
STATE OF UTAH

MHTN PROJECT NO. 2015505

DRAWN BY: Author CHECKED BY: Checker

ISSUED:

NO.	DATE	DESCRIPTION

CONTRACTOR TO VERIFY DRAWINGS IN FIELD USE REFLECT LAST REVISION DATE:

NO.	DATE	DESCRIPTION

SHEET NAME
ELECTRICAL SITE PLAN

CONSTRUCTION DOCUMENTS
APRIL 15, 2015

SHEET NUMBER
E1.00

E:\Revit User Files\15039 OSD Highland JRHS REMODEL Elec v15_drayton.rvt
4/13/2015 11:21:10 AM

SHEET KEYNOTES

1. EXISTING AREA TO RECEIVE NEW CEILING AND SELECT WALL FINISHES. REMOVE ALL EXISTING LIGHT FIXTURES AND ELECTRICAL APPARATUSES REQUIRED FOR DEMOLITION. REMOVE ALL CONDUIT, BOXES AND WIRE THAT ARE NOT BEING RE-USED BACK TO SOURCE. KEEP EXISTING ELECTRICAL DEVICES, WIRE, CONDUIT, ETC THAT ARE TO BE RE-USED. RE-LOCATE OR EXTEND BOX TO NEW SURFACE AND RE-INSTALL DEVICES I.E. FIRE ALARM, CAMERAS, POWER, DATA, ETC. UNLESS OTHERWISE NOTED.

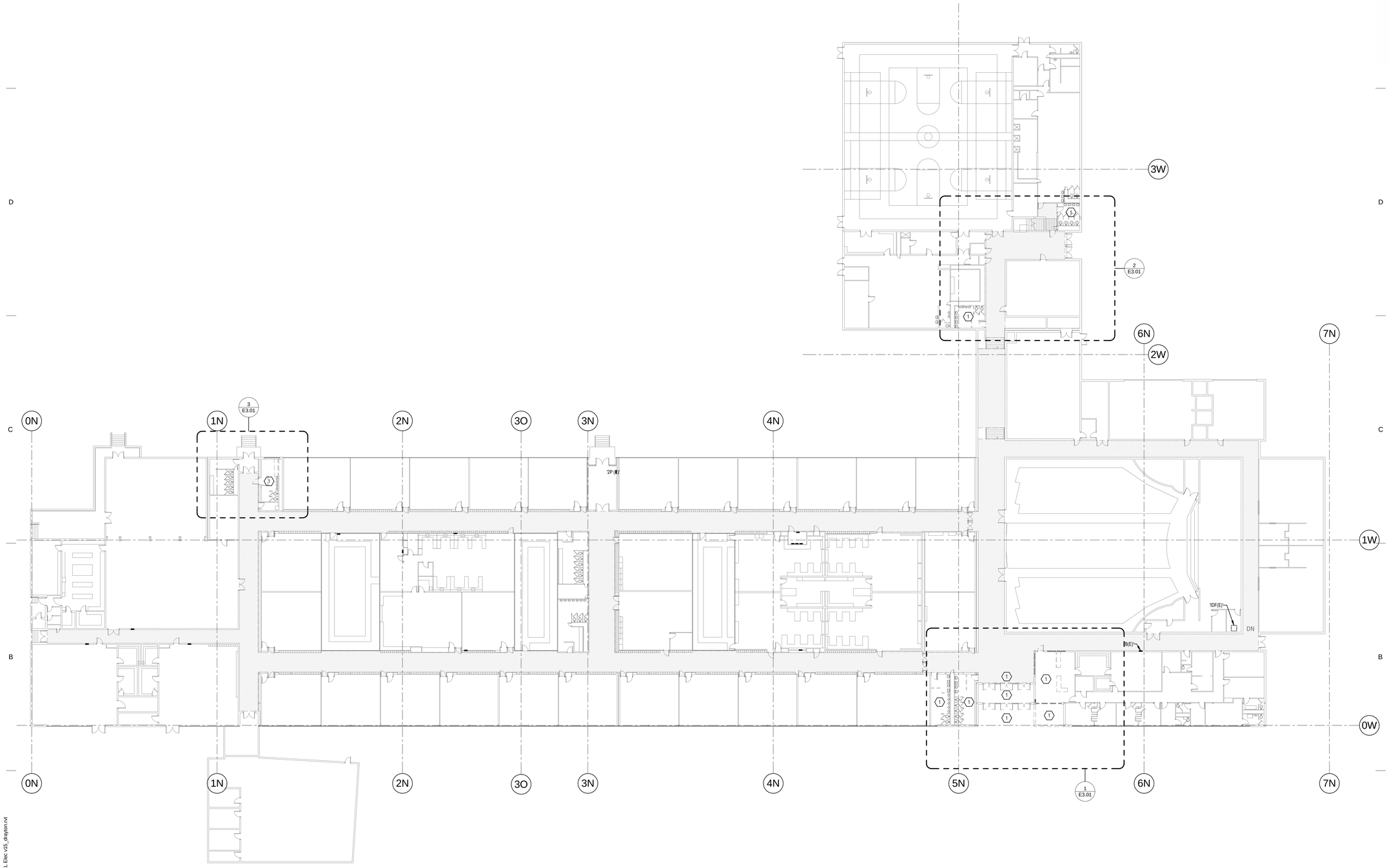

LEVEL 1 OVERALL ELECTRICAL PLAN
SCALE = 3/64" = 1'-0"

E:\Revit User Files\15039 OSD Highland JRHS REMODEL Elec v15_drayton.rvt
4/13/2015 11:21:11 AM

MHTN ARCHITECTS
MHTN Architects, Inc.
420 East South Temple
Suite 100
Salt Lake City, Utah 84111
Telephone (801) 595-6700
Telefax (801) 595-6717
www.mhtn.com

OGDEN SCHOOL DISTRICT
Empowering Excellence Through Education

BNA CONSULTING
SALT LAKE ST.GEORGE
635 South State Street
Salt Lake City, Utah 84111
P:801.532.2196
F:801.532.2305
www.bnaconsulting.com

© 2015 BNA CONSULTING

OGDEN SCHOOL DISTRICT
HIGHLAND JUNIOR HIGH SCHOOL REMODEL
325 GRAMERCY AVE.
OGDEN, UTAH 84404

©2011 MHTN ARCHITECTS, INC.
Drawings, written material, and design concepts shall not be used or reproduced in whole or part in any form or format without prior written consent of MHTN Architects, Inc. Do not scale drawings. Use given dimensions only. If not shown, verify correct dimensions with the Architect. Contractor shall check and verify all dimensions and conditions at job site.

SEAL

LICENSED PROFESSIONAL ENGINEER
No. 4816
GARY W. MESKER
STATE OF UTAH

MHTN PROJECT NO. 2015505

DRAWN BY: Author CHECKED BY: Checker

ISSUED:

NO.	DATE	DESCRIPTION

CONTRACTOR TO VERIFY DRAWINGS IN FIELD USE REFLECT LAST REVISION DATE.

NO.	DATE	DESCRIPTION

SHEET NAME
FIRST FLOOR OVERALL ELECTRICAL PLAN
CONSTRUCTION DOCUMENTS
APRIL 15, 2015

SHEET NUMBER
E1.01

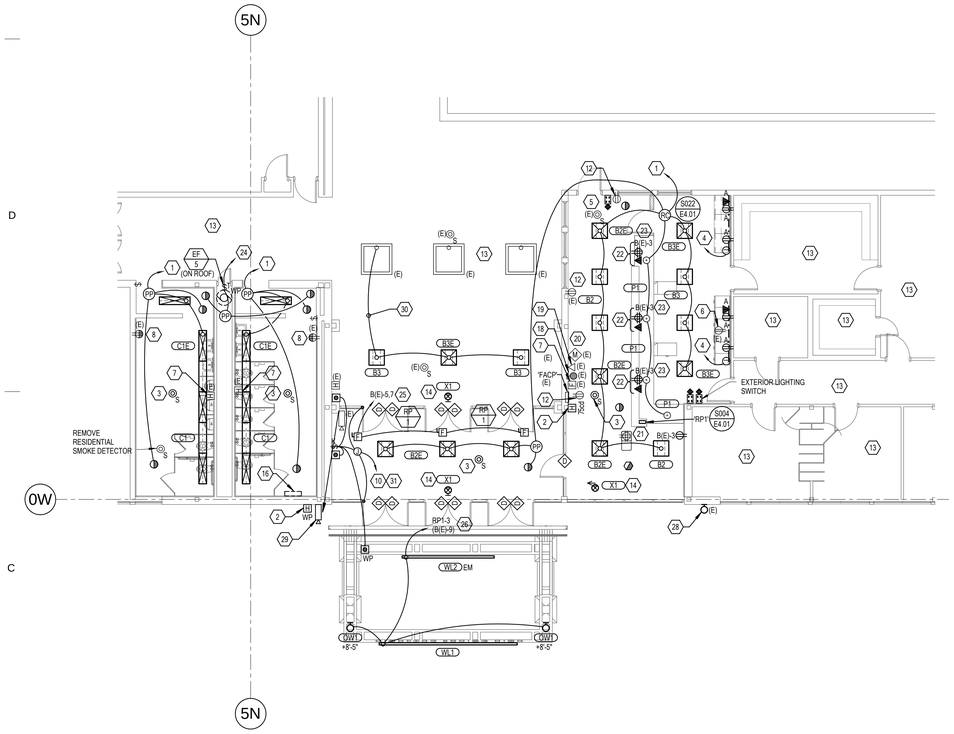

1 ENTRY ELECTRICAL FLOOR PLAN
SCALE = 1/8" = 1'-0"

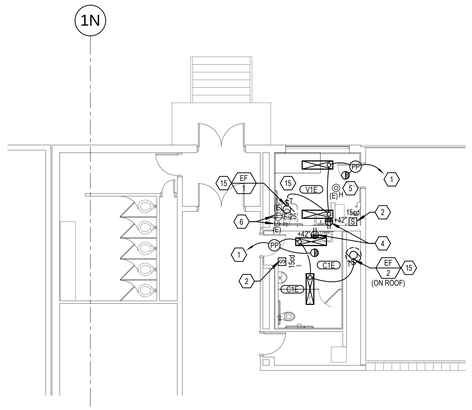

3 BOYS RESTROOM ELECTRICAL FLOOR PLAN
SCALE = 1/8" = 1'-0"

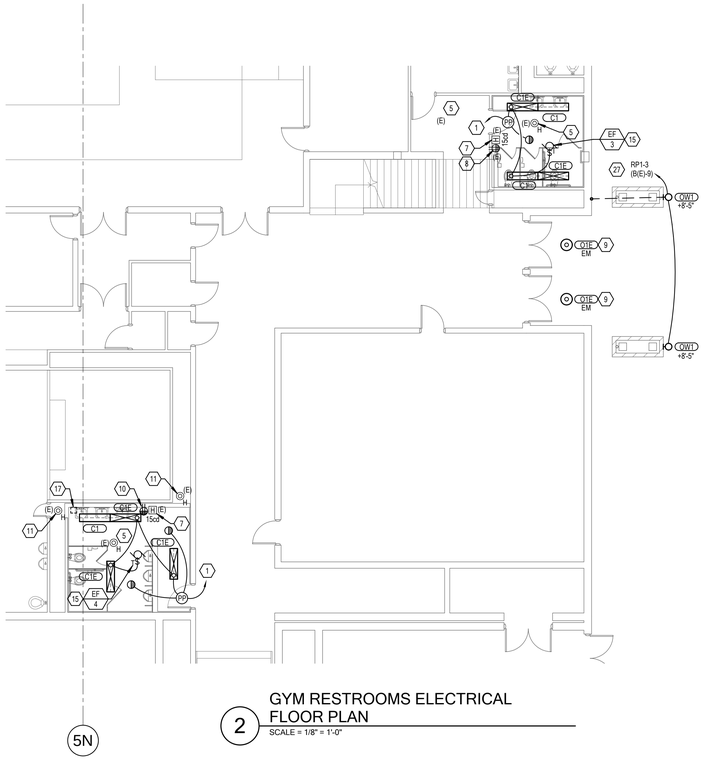

2 GYM RESTROOMS ELECTRICAL FLOOR PLAN
SCALE = 1/8" = 1'-0"

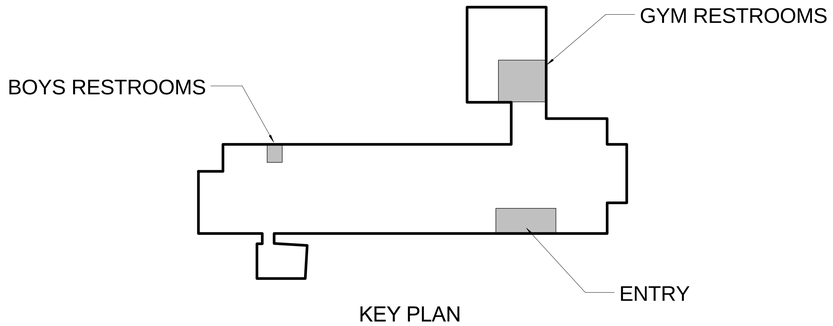

KEY PLAN

GENERAL SHEET NOTES

1. DIVISION 26 SHALL CONFIRM EXACT LOCATION OF EXISTING AND NEW EQUIPMENT WITH OWNERS. FIXTURE LOCATIONS DIAGRAMMATICALLY SHOWN ON THE DRAWINGS. EXISTING ELECTRICAL FIXTURES, DEVICES, EQUIPMENT, CIRCUITING AND/OR CONDITIONS ARE NOT SPECIFIED UNLESS NOTED ON DRAWINGS. FINAL ROUTING OF THE CONDUITS, CIRCUITING, AND CABLING SHALL BE DETERMINED BY THE CONTRACTOR AND CLOSELY COORDINATED WITH OWNER. ALL EXISTING CONDITIONS MUST BE VERIFIED WITHOUT EXCEPTION.
2. ROUTE AND TERMINATE NEW DATA OUTLETS CABLES TO EXISTING IDF CLOSET LOCATED ON THE STAGE.
3. ROUTE AND TERMINATE NEW SECURITY DEVICES CABLES TO EXISTING SECURITY/ACCESS CONTROL PANEL LOCATED IN OFFICE. VERIFY EXACT LOCATION PRIOR TO ROUGH-IN.
4. PROVIDE BLANK COVERPLATES ON ALL EXISTING BOXES LOCATED IN MASONRY THAT ARE NOT BEING RE-USED.

SHEET KEYNOTES

1. CIRCUIT LIGHT FIXTURES TO LIGHTING CIRCUIT PREVIOUSLY FEEDING THIS CLASSROOM/AREA. PROVIDE NEW LIGHTING CONTROLS AS SHOWN. REMOVE EXISTING LIGHT SWITCH(S) AND PROVIDE A BLANK COVERPLATE.
2. PROVIDE NEW HORN/STROBE OR STROBE AS SHOWN. TIE ONTO EXISTING FIRE ALARM LOOP.
3. PROVIDE NEW SMOKE/HEAT DETECTOR AS SHOWN. TIE INTO THE EXISTING FIRE ALARM INITIATION LOOP.
4. CIRCUIT NEW DEVICE(S) TO EXISTING RECEPTACLE CIRCUIT FREED DURING DEMOLITION.
5. EXISTING FIRE ALARM SMOKE/HEAT DETECTOR. REMOVE AND RE-INSTALL DEVICE IN NEW CEILING SYSTEM.
6. REMOVE EXISTING ELECTRICAL WIRING DEVICES. REMOVE ALL UNUSED WIRING AND RACEWAY. MAINTAIN CIRCUIT INTEGRITY AS REQUIRED.
7. EXISTING FIRE ALARM HORN/STROBE/PULL STATION LOCATION. REMOVE DEVICE AND EXTEND BOX TO NEW WALL SURFACE. RE-WORK AND RE-INSTALL EXISTING DEVICE.
8. EXISTING RECEPTACLE LOCATION. REMOVE DEVICE AND EXTEND BOX TO NEW WALL SURFACE. RE-WORK AND INSTALL NEW GFCI RECEPTACLE.
9. EXISTING EXTERIOR LIGHT FIXTURE LOCATION. REMOVE LIGHT FIXTURE AND INSTALL NEW FIXTURE TYPE AS SHOWN. RE-WORK AND MAINTAIN CIRCUITING AND CONTROL FUNCTIONALITY.
10. PROVIDE NEW DEVICE AND COVERPLATE. WIRE TO NEAREST 120V CIRCUIT.
11. EXISTING FIRE ALARM SMOKE/HEAT DETECTOR. REMOVE AND RE-INSTALL DEVICE AS REQUIRED FOR NEW CONSTRUCTION.
12. EXISTING RECEPTACLE LOCATION. REMOVE DEVICE AND EXTEND BOX TO NEW WALL SURFACE. RE-WORK AND INSTALL NEW DEVICE AND COVERPLATE.
13. EXISTING DEVICES IN THIS SPACE ARE TO REMAIN UNLESS NOTED OTHERWISE.
14. CIRCUIT TO EXISTING UNSWITCHED NORMAL CIRCUIT HOT LEG THAT WAS PREVIOUSLY FEEDING EXIT SIGNS.
15. WIRE EXHAUST FAN TO OPERATE SUCH THAT IT TURNS ON/OFF WITH LIGHTING OCCUPANCY SENSOR DELAY.
16. DISCONNECT HEATING UNIT. EXTEND CONDUIT AND WIRE AS REQUIRED AND RE-CONNECT AFTER RELOCATED.
17. REMOVE THE TIME SWITCH IN THE EXISTING PIPE CHASE, AND ALL OTHER ELECTRICAL APPARATUS FROM THE CHASE.
18. EXISTING INTERCOM SPEAKER LOCATION. REMOVE DEVICE AND EXTEND BOX TO NEW WALL SURFACE. RE-WORK AND RE-INSTALL EXISTING DEVICE.
19. EXISTING TELEPHONE OUTLET LOCATION. REMOVE DEVICE AND EXTEND BOX TO NEW WALL SURFACE. RE-WORK AND RE-INSTALL EXISTING DEVICE.
20. EXISTING MOTION DETECTOR LOCATION. REMOVE DEVICE AND EXTEND BOX TO NEW WALL SURFACE. RE-WORK AND RE-INSTALL EXISTING DEVICE.
21. REMOVE EXISTING FLOOR OUTLET.
22. DEVICES LOCATED IN KNEESPACE OF MILLWORK. COORDINATE WITH MILLWORK SHOP DRAWINGS PRIOR TO ROUGH-IN.
23. PROVIDE (1) 20A 1 POLE BREAKER WITHIN EXISTING 120/208V 3P PANEL 'B (E)' AND WIRE THE FOURPLEX RECEPTACLE TO NEW CIRCUIT ACCORDINGLY. CIRCUIT NUMBER FOR REFERENCE ONLY.
24. CIRCUIT TO EXISTING CIRCUIT THAT WAS PREVIOUSLY FEEDING CEILING EXHAUST FAN IN THIS AREA. WIRE EXHAUST FAN TO OPERATE SUCH THAT IT TURNS ON/OFF WITH DEDICATED EXHAUST FAN OCCUPANCY SENSOR.
25. PROVIDE (1) 20A 2 POLE BREAKER WITHIN EXISTING 120/208V 3P PANEL 'B (E)' AND WIRE THE ELECTRIC RADIANT PANELS TO NEW CIRCUIT ACCORDINGLY. CIRCUIT NUMBER FOR REFERENCE ONLY.
26. PROVIDE CONDUIT AND WIRE UNDERGROUND AND RISE UP INSIDE CANOPY PIER. DRILL AND PENETRATE THRU AND INTO TUBE STEEL RESTING UPON CANOPY PIERS. ROUTE FLEX CONDUIT AND WIRING CONTINUOUSLY INSIDE TUBE STEEL AND PROVIDE WEATHERPROOF CONNECTION TO FIXTURE TYPE 'WL1' AND 'WL2'. COORDINATE STRICTLY WITH THE ARCHITECT FOR MAXIMUM CONCEALMENT OF THE CONDUIT. RUN CONDUIT AND WIRE TO RELAY PANEL LOCATION AS SHOWN. PROVIDE (1) 20A 1 POLE BREAKER WITHIN EXISTING 120/208V 3P PANEL 'B (E)' AND WIRE THE EXTERIOR LIGHT FIXTURES ACCORDINGLY. CIRCUIT NUMBER FOR REFERENCE ONLY.
27. ROUTE CONDUIT AND CORE-DRILL INTO BUILDING AS REQUIRED. AVOID RISING-UP WITH CONDUIT ON THE EXTERIOR WALL IF POSSIBLE. IF REQUIRED, RISE-UP SLIGHTLY WITH CONDUIT IN A CLEAN AND CRAFTSMANSHIP LIKE MANNER AND ENTER INTO THE BUILDING. PAINT CONDUIT TO MATCH EXISTING EXTERIOR WALL. RUN CONDUIT AND WIRE TO RELAY PANEL LOCATION AS SHOWN. PROVIDE (1) 20A 1 POLE BREAKER WITHIN EXISTING 120/208V 3P PANEL 'B (E)' AND WIRE THE EXTERIOR LIGHT FIXTURES ACCORDINGLY. CIRCUIT NUMBER FOR REFERENCE ONLY.
28. REMOVE EXISTING EXTERIOR WALLPACK.
29. RELOCATE EXISTING EXTERIOR CAMERA TO THIS LOCATION. PROVIDE NEW CATEGORY CABLE BACK TO EXISTING IDF CLOSET.
30. NEW WIRING TO MATCH EXISTING.
31. COORDINATE EXACT LOCATION OF JUNCTION BOXES SERVING AUTOMATIC DOOR OPERATION. VERIFY CONDUIT REQUIREMENTS WITH DOOR INSTALLER INSTRUCTIONS. REFER TO DIAGRAM E021/E4.01 & ARCHITECTURAL DETAIL.

MHTN ARCHITECTS
MHTN Architects, Inc.
420 East South Temple
Suite 100
Salt Lake City, Utah 84111
Telephone (801) 595-6700
Telefax (801) 595-6717
www.mhtn.com

OGDEN SCHOOL DISTRICT
Empowering Excellence Through Education

BNA CONSULTING
SALT LAKE ST.GEORGE
635 South State Street
Salt Lake City, Utah 84111
P:801.532.2196
F:801.532.2305
www.bnaconsulting.com
© 2015 BNA CONSULTING

OGDEN SCHOOL DISTRICT
HIGHLAND AND JUNIOR HIGH SCHOOL REMODEL
325 GRAMERCY AVE.
OGDEN, UTAH 84404

©2011 MHTN ARCHITECTS, INC.
Drawings, written material, and design concepts shall not be used or reproduced in whole or part in any form or format without prior written consent of MHTN Architects, Inc. Do not scale drawings. Use given dimensions only. If not shown, verify correct dimensions with the Architect. Contractor shall check and verify all dimensions and conditions at job site.

SEAL

MHTN PROJECT NO. 2015505

DRAWN BY: Author CHECKED BY: Checker

ISSUED:

NO.	DATE	DESCRIPTION

CONTRACTOR TO VERIFY DRAWINGS IN FIELD USE REFLECT LAST REVISION DATE.

NO.	DATE	DESCRIPTION

SHEET NAME
FIRST FLOOR ELECTRICAL PLANS

CONSTRUCTION DOCUMENTS
APRIL 15, 2015

SHEET NUMBER
E3.01

E:\Revit User Files\15039 OSD Highland JRHS REMODEL Elec v15_drayton.rvt
4/13/2015 11:21:13 AM

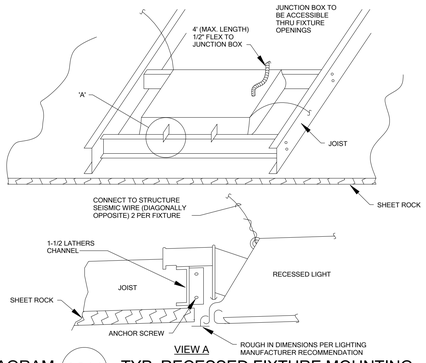

DIAGRAM A014 TYP. RECESSED FIXTURE MOUNTING

NTS

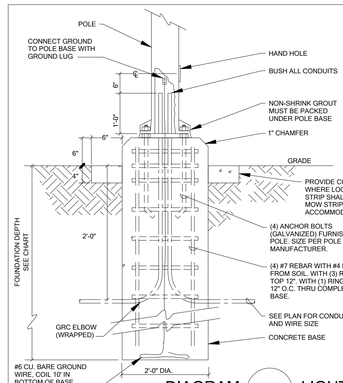

POLE FOUNDATION DEPTH

POLE HEIGHT	FLUSH TO 6" ABOVE GRADE
10'	3'
15'	3'-6"
20'	4'
25'	4'-6"
30'	5'
35'	5'-6"
40'	6'

* ALL FOUNDATIONS ARE 24" IN DIAMETER UNLESS NOTED OTHERWISE.

PROVIDE BUSSMAN HEB FUSEHOLDER (OR LITTELFUSE LEB-XX-S) WITH "BREAKAWAY" RECEPTACLES IN ALL CONDUCTORS RUNNING TO THE TOP OF EACH POLE. LOCATE FUSEHOLDER AT HAND HOLE OR IN BASE JUNCTION BOX AS APPLICABLE.

DIAGRAM C002 LIGHTING POLE FOUNDATION

NTS

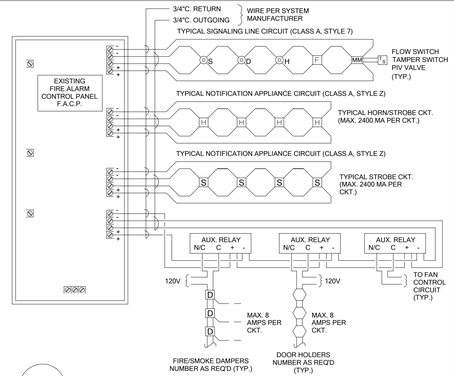

DIAGRAM D002 TYPICAL FIRE ALARM RISER

NTS

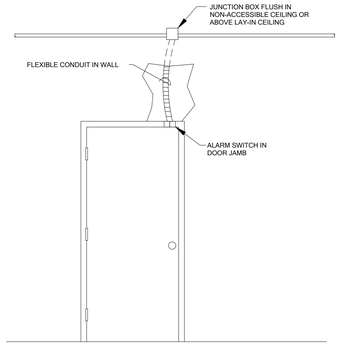

DIAGRAM E001 SECURITY SYSTEM DOOR SWITCH

NTS

NOTES:

1. ALL CONDUIT AND WIRE BY DIVISION 26.
2. ALL LOW VOLTAGE CONNECTIONS AND HARDWARE BY OTHERS.
3. SEE DRAWINGS FOR EXACT NUMBER OF DOORS AND PROVIDE ROUGH-IN ACCORDINGLY.
4. COORDINATE WITH HARDWARE INSTALLER FOR EXACT LOCATION OF ACTUATORS, OPERATORS AND ANY ADDITIONAL REQUIREMENTS.
5. SEE DOOR HARDWARE SPECIFICATIONS FOR WIRE REQUIREMENTS.

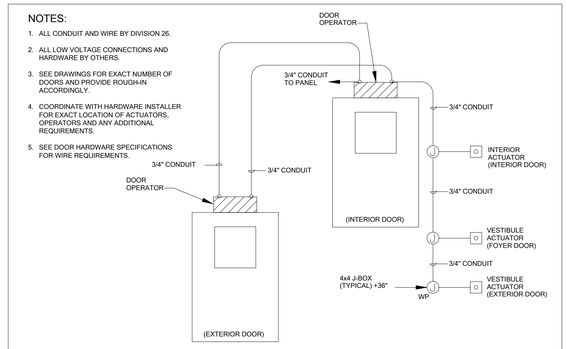

DIAGRAM E021 ADA ENTRY SYSTEMS

NTS

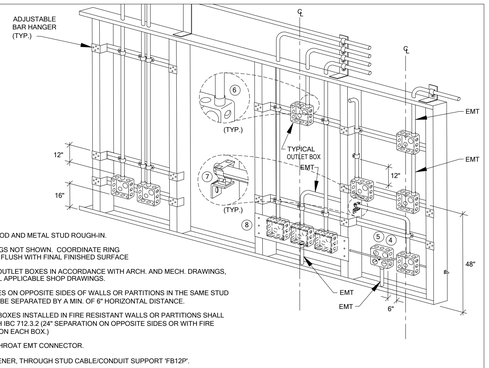

NOTES:

1. TYP. FOR WOOD AND METAL STUD ROUGH-IN.
2. PLASTER RINGS NOT SHOWN. COORDINATE RING DEPTH TO BE FLUSH WITH FINAL FINISHED SURFACE.
3. LOCATE ALL OUTLET BOXES IN ACCORDANCE WITH ARCH. AND MECH. DRAWINGS, AND WITH ALL APPLICABLE SHOP DRAWINGS.
4. OUTLET BOXES ON OPPOSITE SIDES OF WALLS OR PARTITIONS IN THE SAME STUD SPACE MUST BE SEPARATED BY A MIN. OF 6" HORIZONTAL DISTANCE.
5. ELECTRICAL BOXES INSTALLED IN FIRE RESISTANT WALLS OR PARTITIONS SHALL COMPLY WITH IBC 712.3.2 (24" SEPARATION ON OPPOSITE SIDES OR WITH FIRE STOP PUTTY ON EACH BOX.)
6. INSULATED THROAT EMT CONNECTOR.
7. CADDY FASTENER, THROUGH STUD CABLE/CONDUIT SUPPORT 'FB12P'.
8. CADDY BOX MOUNTING BRACKET 'RBS16'.

DIAGRAM H004 TYPICAL ROUGH IN REQUIREMENTS

NTS

NOTE:

1. PROGRAM LIGHTING CONTROLLER PER OWNERS REQUIREMENTS.
2. SEE MANUFACTURERS INSTALLATIONS INSTRUCTIONS FOR EXACT WIRING REQUIREMENTS.

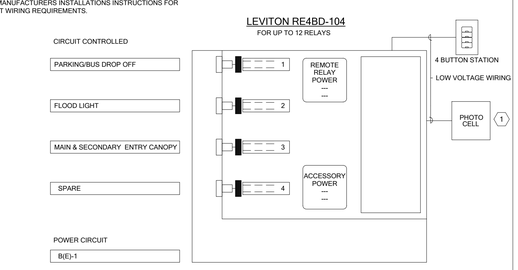

REFERENCE NOTES

1. MOUNT PHOTO CELL ON NORTH SIDE OF SCHOOL BUILDING. MOUNT IN CONSTANT SHADED AREA LOCATION.

DIAGRAM S004 RELAY PANEL 'RP1'

NTS

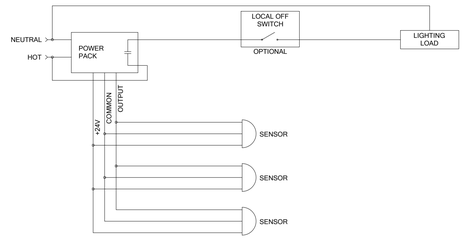

DIAGRAM S009 MULTIPLE SENSOR CONTROLLING ONE POWER PACK

NTS

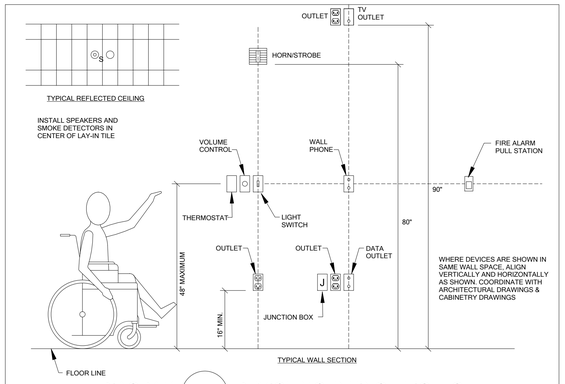

DIAGRAM R001 DEVICE MOUNTING HEIGHTS

NTS

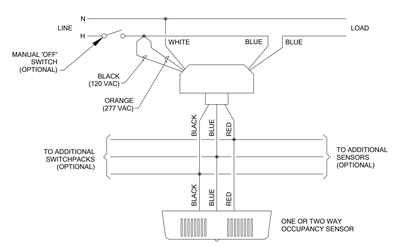

DIAGRAM R006 OCCUPANCY SENSORS

NTS

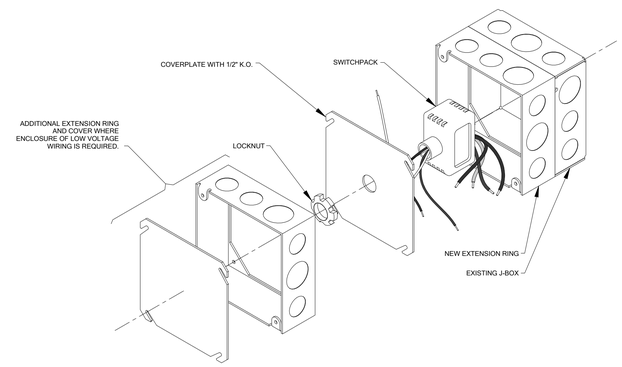

GENERAL DIAGRAM NOTES:

1. EXACT SPACE LAYOUTS VARY. SEE PLANS FOR APPROXIMATE EQUIPMENT LOCATIONS AND QUANTITY.
2. ALL ROOM CONTROLLERS SHALL ALLOW FOR TYPICAL 0-10V DIMMING, DAYLIGHT HARVESTING & OCCUPANCY SENSING, INDEPENDENT DIMMING AND OVERRIDE OF EACH ZONE IS REQUIRED.
3. DAYLIGHT ZONES SHALL BE PROGRAMMED WITH FIRST AND SECONDARY ZONES.

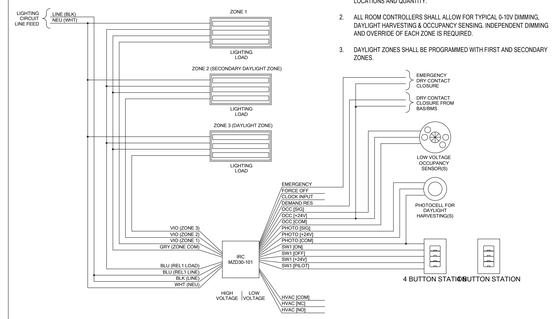

DIAGRAM S022 ROOM CONTROLLER, DAYLIGHTING, DIMMING, 3 ZONES

NTS

MHTN ARCHITECTS

MHTN Architects, Inc.
420 East South Temple
Suite 100
Salt Lake City, Utah 84111
Telephone (801) 595-6700
Telefax (801) 595-6717
www.mhtn.com

OGDEN SCHOOL DISTRICT
Empowering Excellence Through Education

BNA CONSULTING
SALT LAKE ST.GEORGE
635 South State Street
Salt Lake City, Utah 84111
P:801.532.2196
F:801.532.2305
www.bnaconsulting.com

© 2015 BNA CONSULTING

OGDEN SCHOOL DISTRICT

HIGHLAND JUNIOR HIGH SCHOOL REMODEL

325 GRAMERCY AVE.
OGDEN, UTAH 84404

©2011 MHTN ARCHITECTS, INC.

Drawings, written material, and design concepts shall not be used or reproduced in whole or part in any form or format without prior written consent of MHTN Architects, Inc. Do not scale drawings. Use given dimensions only. If not shown, verify correct dimensions with the Architect. Contractor shall check and verify all dimensions and conditions at job site.

SEAL

LICENSED PROFESSIONAL ENGINEER No. 4816 GARY W. MESKER STATE OF UTAH

MHTN PROJECT NO. 2015505

DRAWN BY: Author CHECKED BY: Checker

ISSUED:

NO.	DATE	DESCRIPTION

CONTRACTOR TO VERIFY DRAWINGS IN FIELD USE REFLECT LAST REVISION DATE.

NO.	DATE	DESCRIPTION

SHEET NAME

ELECTRICAL DIAGRAMS

CONSTRUCTION DOCUMENTS
APRIL 15, 2015

SHEET NUMBER

E4.01

E:\Revit User Files\15039 OSD Highland JRHS REMODEL Elec v15_draylon.rvt
4/13/2015 11:21:13 AM