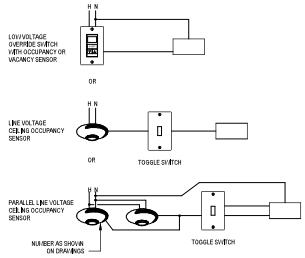


1 TYPICAL LINE VOLTAGE WIRING DIAGRAM
SCALE: NTS

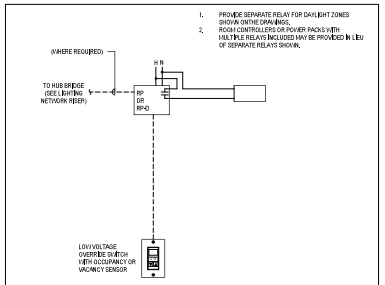


2 TYPICAL LOW-VOLTAGE WALL SWITCH OCC. SENSOR WIRING DIAGRAM
SCALE: NTS

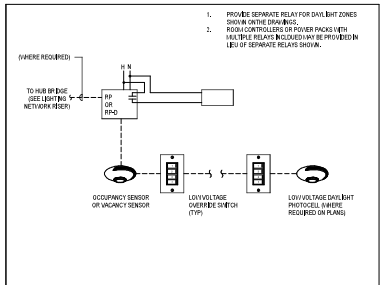


3 TYPICAL LOW-VOLTAGE WIRING DIAGRAM
SCALE: NTS

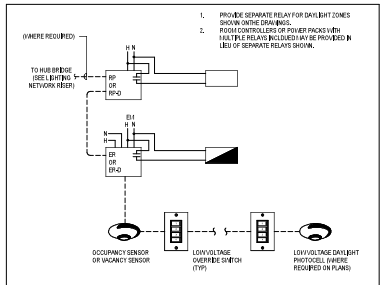


4 TYPICAL LOW-VOLTAGE WITH EGRESS WIRING DIAGRAM
SCALE: NTS

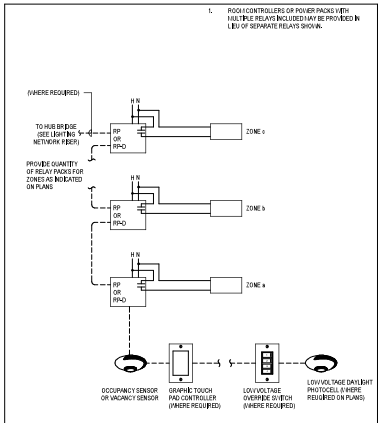


5 TYPICAL ZONED LOW-VOLTAGE WIRING DIAGRAM
SCALE: NTS

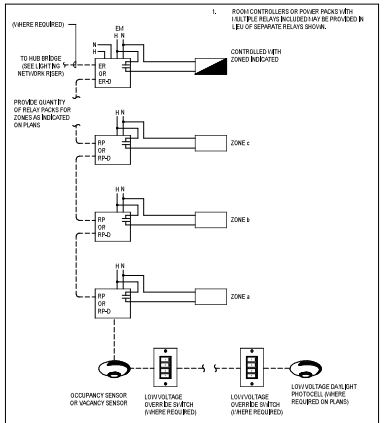


6 TYPICAL ZONED LOW-VOLTAGE WITH EGRESS WIRING DIAGRAM
SCALE: NTS

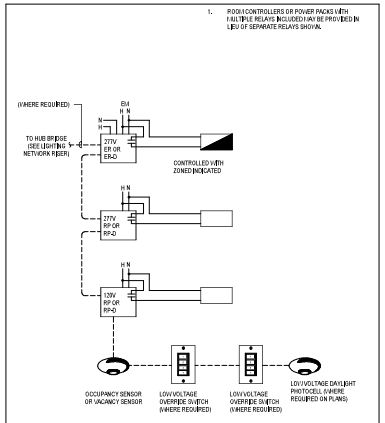


7 TYPICAL LOW-VOLTAGE WITH 120V POWER PACK AND EGRESS WIRING DIAGRAM
SCALE: NTS

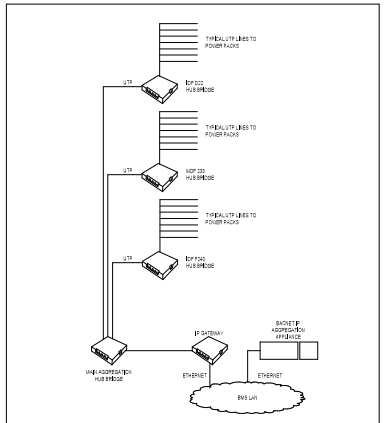


8 NETWORKED LIGHTING CONTROL RISER DIAGRAM
SCALE: NTS

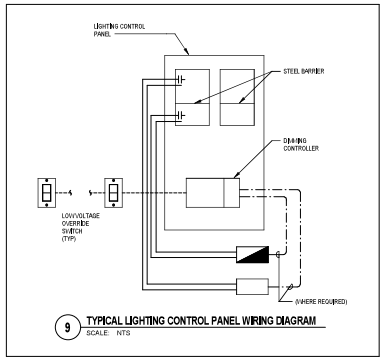


9 TYPICAL LIGHTING CONTROL PANEL WIRING DIAGRAM
SCALE: NTS

MHTN
ARCHITECTS
MHTN Architects, Inc.
420 East South Temple
Suite 100
Salt Lake City, Utah 84111
Telephone (801) 595-8700
Telefax (801) 595-8717
www.mhtn.com

ENVISION ENGINEERING
240 E. MORRIS AVE, SUITE 200
SALT LAKE CITY, UT 84115
P (801) 534-1130
F (801) 534-1080
www.envisioneng.com

# OGDEN SCHOOL DISTRICT
## HORACE MANN ELEMENTARY SCHOOL - RFP 20-012
1300 9TH STREET
OGDEN, UTAH 84404

©2019 MHTN ARCHITECTS, INC.
Contents of this publication are intended for use on the Project identified herein by mutually agreed upon contracts between the design, permitting, bidding and construction of the Project, MHTN Architects, Inc., grants limited rights to distribute and reproduce this document for the express purpose of the construction, printing or copying for the project by persons other than those involved in the design, permitting, bidding and construction of the Project, and for no other purpose.

SEAL

MHTN PROJECT NO. 2019005

Original drawing is 36 x 48. Do not scale contents of this drawing.

REVISIONS
CONTRACTOR TO VERIFY DRAWINGS IN FIELD. USE REFLECT LATEST REVISION DATE.

| NO. | DATE | DESCRIPTION |
|---|---|---|
| | | |

ISSUE
CONSTRUCTION DOCUMENTS
NOVEMBER 21, 2019

SHEET NAME
LIGHTING CONTROL WIRING DIAGRAMS

SHEET NUMBER
E-230

C:\Revit 2019 Local Files\2019-001_ELEC-CENTRAL_V19_ph8-wsp.rvt
11/20/2019 2:42:39 AM

LIGHTING CONTROL SYSTEM REQUIREMENTS:

NETWORKED LOW-VOLTAGE LIGHTING CONTROL SYSTEMS: PROVIDE A DIGITAL DISTRIBUTED INTELLIGENT, NETWORKED LOW-VOLTAGE LIGHTING CONTROL SYSTEM FOR THE FOLLOWING ROOMS/AREAS:

CLASSROOMS
COLLABORATION SPACES
STAIRS
COMMONS
SERVING
VESTIBULES AND PASSAGE WAYS
MULTIPURPOSE ROOM
PLATFORM
MEDIA CENTER
BUILDING EXTERIOR

THE SYSTEM SHALL INCLUDE, BUT IS NOT LIMITED TO CEILING-MOUNTED OCCUPANCY SENSORS, LIGHT LEVEL SENSORS, LOW VOLTAGE CONTROL WALL SWITCHES, POWER PACKS, GATEWAYS, BRIDGES, EQUIPMENT, LOW VOLTAGE CABLES, INTERNET CONNECTION, SOFTWARE, PROGRAMMING, ETC.

PROVIDE NLIGHT SENSOR/NEW SOFTWARE OR PRIOR-APPROVED EQUIVALENT FOR THE ABILITY TO REMOTELY CONFIGURE AND MONITOR EVERY NETWORKED NLIGHT SYSTEM DEVICE. PROVIDE BACNET SOFTWARE PLUG-IN TO ENABLE SENSOR/NEW TO ACT AS A BACNET IP "GATEWAY" BETWEEN THE NLIGHT NETWORK AND THE OGDEN SCHOOL DISTRICT BUILDING MANAGEMENT SYSTEM. THE SOFTWARE SHALL HAVE A SIMPLE AND QUICK SETUP TOOL FOR CREATING CUSTOM CONFIGURATION PROFILES THAT CAN EITHER BE SCHEDULED OR RUN ON DEMAND. THE SOFTWARE SHALL ALLOW FOR:

VIEWING DEVICE PROPERTIES
CUSTOMIZING ALL DEVICE NAMES
CONFIGURING ALL DEVICE DEFAULT SETTINGS
EDITING DEVICE CURRENT SETTINGS
OBSERVING REAL-TIME DEVICE OPERATIONAL STATUSES
VIEWING ENERGY CONSUMPTION
UPDATING DEVICE FIRMWARE
GROUPING NETWORK DEVICES
CREATING LIGHTING PROFILES THAT OUTLINE DEVICE OPERATION
SCHEDULING PROFILES TO RUN AT PRESCRIBED TIMES WITH OPTIONAL RECURRENCES
MANAGING USER ACCESS OF NLIGHT GATEWAYS AND THE SENSOR/NEW PROGRAM
PRINTING REPORTS ON THE NETWORK INVENTORY AND PROFILES
REMOTE TECHNICAL SUPPORT VIA THE INTERNET

PROVIDE POWER PACKS IN TYPES AND RATINGS AS MAY BE REQUIRED FOR A COMPLETE AND FULLY FUNCTIONAL SYSTEM WHETHER SHOWN ON THE DRAWINGS OR NOT. WHERE POWER PACKS ARE SERVING LOADS IN HIGH CEILING AREAS, LOCATE POWER PACKS IN THE ELECTRICAL ROOM WHERE LINE VOLTAGE WIRING IS ORIGINATING FROM.

THE SYSTEM SHALL INTER EACH POINT OF CONTROL AND PROVIDE ENERGY USAGE AND POWER DEMAND DATA BACK TO THE OGDEN SCHOOL DISTRICT BUILDING MANAGEMENT SYSTEM.

OCCUPANCY SENSORS SHALL BE SET FOR "MANUAL ON – AUTO OFF" IN THE FOLLOWING SPACES:

CLASSROOMS
PLATFORM
MEDIA CENTER
SERVING

OCCUPANCY SENSORS SHALL BE SET FOR "AUTO ON – AUTO OFF" IN THE FOLLOWING SPACES:

COLLABORATION SPACES
STAIRS
COMMONS
VESTIBULES AND PASSAGE WAYS
MULTIPURPOSE ROOM

ALL CEILING-MOUNTED OCCUPANCY SENSORS SHALL BE PROVIDED WITH AN AUXILIARY CONTACT FOR HVAC CONTROL.

SKYLIGHTS AND BLINDS SHALL BE CONTROLLED VIA THE NETWORKED LOW VOLTAGE LIGHTING CONTROL SYSTEM. REFER TO LOW VOLTAGE LIGHTING SYSTEM CONTROL SCHEDULES.

PROVIDE LIGHTING CONTROL RELAY PANELS AS INDICATED ON THE ELECTRICAL DRAWINGS. RELAY PANELS SHALL BE TIED INTO THE NETWORKED LOW VOLTAGE LIGHTING CONTROL SYSTEM.

REFER TO LOW VOLTAGE LIGHTING CONTROL SCHEDULES FOR A COMPLETE DESCRIPTION ON PROGRAMMING SCENES, TASK TUNING, ETC. EACH STANDALONE SYSTEM SHALL BE PROGRAMMED TO REVERT BACK TO ITS NORMAL "ON" POSITION ONE HOUR AFTER SELECTING A SCENE OR PRESSING OR LOWERING A LIGHTING ZONE.

STANDALONE LOW VOLTAGE LIGHTING CONTROL SYSTEMS: PROVIDE DIGITAL STANDALONE LOW VOLTAGE LIGHTING CONTROL SYSTEMS IN THE FOLLOWING ROOMS/AREAS:

LARGE BOYS AND GIRLS RESTROOMS
LARGE STORAGE ROOMS
TEACHER PREP
CONFERENCE ROOMS
TEACHERS LOUNGES
WORK ROOMS
RECEPTION
HEALTH
OFFICES
KITCHEN
RECEIVING

THE SYSTEMS SHALL INCLUDE, BUT IS NOT LIMITED TO CEILING-MOUNTED OCCUPANCY SENSORS, LIGHT LEVELS SENSORS, LOW VOLTAGE CONTROL WALL SWITCHES, POWER PACKS, LOW VOLTAGE CABLES, PROGRAMMING, ETC.

PROVIDE POWER PACKS IN TYPES AND RATINGS AS MAY BE REQUIRED FOR A COMPLETE AND FULLY FUNCTIONAL SYSTEM WHETHER SHOWN ON THE DRAWINGS OR NOT. WHERE POWER PACKS ARE SERVING LOADS IN HIGH CEILING AREAS, LOCATE POWER PACKS IN THE ELECTRICAL ROOM WHERE LINE VOLTAGE WIRING IS ORIGINATING FROM.

OCCUPANCY SENSORS SHALL BE SET FOR "MANUAL ON – AUTO OFF" WITH A 10 MINUTE DELAY IN THE FOLLOWING SPACES:

CONFERENCE ROOMS
HEALTH
OFFICES

OCCUPANCY SENSORS SHALL BE SET FOR "AUTO ON – AUTO OFF" WITH A 10 MINUTE DELAY IN THE FOLLOWING SPACES:

LARGE BOYS AND GIRLS RESTROOMS
LARGE STORAGE ROOMS
TEACHER PREP
TEACHERS LOUNGES
WORK ROOMS
RECEPTION
RECEIVING

ALL CEILING-MOUNTED OCCUPANCY SENSORS SHALL BE PROVIDED WITH AN AUXILIARY CONTACT FOR HVAC CONTROL.

ALL LOW VOLTAGE LIGHTING CONTROL SWITCHES SHALL HAVE EACH SCENE NAME "LASER SCREENED" ONTO THE FRONT OF THE SWITCH IN BLACK LETTERS.

REFER TO LOW VOLTAGE LIGHTING CONTROL SCHEDULES FOR A COMPLETE DESCRIPTION ON PROGRAMMING SCENES, TASK TUNING, ETC. EACH STANDALONE SYSTEM SHALL BE PROGRAMMED TO REVERT BACK TO ITS NORMAL "ON" POSITION ONE HOUR AFTER SELECTING A SCENE OR PRESSING OR LOWERING A LIGHTING ZONE.

LINE-VOLTAGE LIGHTING CONTROL SYSTEM:
PROVIDE LINE-VOLTAGE LIGHTING CONTROL

SYSTEMS IN THE FOLLOWING ROOMS/AREAS:

WALL BOX OCCUPANCY SENSORS:
CUSTODIANS
SMALL STORAGE ROOMS
SMALL TOILET ROOMS
LAUNDRY

SET OCCUPANCY SENSOR TO HAVE A 10 MINUTE DELAY
TIMER SWITCHES:

MECHANICAL ROOMS
ELECTRICAL ROOMS
COMMUNICATIONS ROOMS

TIMER SWITCHES SHALL GIVE OCCUPANTS THE ABILITY TO SELECT FROM 2, 5, 10, 15, 30, OR 60 MINUTES.

OCCUPANCY SENSORS: PLEASE NOTE THAT ELECTRICAL DRAWINGS INDICATE LOCATIONS OF OCCUPANCY SENSORS IN APPROXIMATE LOCATIONS AND QUANTITIES. PROVIDE OCCUPANCY SENSORS IN LOCATIONS, QUANTITIES, AND TYPES AS RECOMMENDED BY THE MANUFACTURER. PROVIDE COMPLETE PRODUCT DATA AND SHOP DRAWINGS INDICATING THE PROPOSED TYPES, COVERAGE PATTERNS, LOCATIONS, AND QUANTITIES. COORDINATE THE LOCATION OF ALL DEVICES WITH CEILING GRIDS, LIGHT FIXTURES, CEILING DIFFUSERS, SPRINKLER HEADS, ETC.

LIGHT LEVEL SENSORS: PLEASE NOTE THAT THE ELECTRICAL DRAWINGS INDICATED LOCATIONS OF LIGHT LEVEL SENSOR IN APPROXIMATE LOCATIONS ONLY. PROVIDE LIGHT LEVEL SENSORS IN LOCATIONS AND TYPES AND RECOMMENDED BY THE MANUFACTURER. PROVIDE COMPLETE PRODUCT DATA AND SHOP DRAWINGS INDICATING THE PROPOSED TYPES AND LOCATIONS. COORDINATE THE LOCATION OF ALL DEVICES WITH CEILING GRIDS, LIGHT FIXTURES, CEILING DIFFUSERS, SPRINKLER HEADS, ETC.

TASK TUNING:

SET THE DEFAULT 0-MAXIMUM LIGHT LEVELS TO SUIT THE PARTICULAR TASK OR USE OF A WORKSPACE AS FOLLOWS:

| FUNCTION / SPACE | BLUM (MAINTENANCE AVG. FOOTCANDLES) |
|---|---|
| CLASSROOMS | 35 FC |
| COLLABORATION SPACES | 35 FC |
| COMMONS | 10 FC |
| STAIRS | 10 FC |
| VESTIBULES | 10 FC |
| RECEPTION | 35 FC |
| OFFICES | 35 FC |
| TEACHER'S LOUNGES | 20 FC |
| CONFERENCE ROOMS | 30 FC |
| TEACHER'S PREP | 30 FC |
| WORK ROOMS | 30 FC |
| LARGE STORAGE ROOMS | 10 FC |
| CORRIDORS | 10 FC |
| MEDIA CENTER | 25 FC |
| LARGE RESTROOMS | 15 FC |
| SMALL TOILET ROOMS | 15 FC |
| MULTIPURPOSE: | |
| ASSEMBLY | 7.5 FC |
| COMPETITIVE SPORTS | 25-35 FC |
| GENERAL | 15 FC |
| PHYSICAL EDUCATION | 25 FC |
| PLATFORM: | |
| GENERAL | 20 FC |
| PERFORMANCE | 50 FC |
| KITCHEN | 50 FC |
| RECEIVING | 30 FC |

VALUES INDICATED ABOVE ARE AVERAGE FOOTCANDLE LEVELS ON THE TASK SURFACE.

DIMMING LEADS:
PROVIDE DIMMING LEADS TO ALL FIXTURES THAT HAVE THE FOLLOWING:
1. NETWORK LOW-VOLTAGE LIGHTING CONTROL SYSTEMS.
2. STAND-ALONE LOW-VOLTAGE LIGHTING CONTROL SYSTEMS.
3. AN WHERE TASK TUNING IS REQUIRED.

EMERGENCY OPERATION: PROVIDE A UL 924 LISTED METHOD FOR OPERATING EGRESS LIGHT FIXTURES. FOR THE NLIGHT SYSTEM THE SHALL INCLUDE FOR USE WITH GENERATOR SUPPLY EMPOWER" OPTION FOR EACH EGRESS LIGHT FIXTURE OR A UL 924 LISTED POWER PACKS FOR GROUPS OF LIGHT FIXTURES. FOR OTHER LIGHTING CONTROL SYSTEMS THAT DO NOT HAVE A "FOR USE WITH GENERATOR SUPPLY EMPOWER" OPTION FOR DESIGNATED EGRESS LIGHT FIXTURES, PROVIDE A GENERATOR TRANSFER DEVICES EQUIVALENT TO BODINE BTD OR TOKATS FOR EACH INDIVIDUAL OR GROUPS OF LIGHT FIXTURES DEPENDING UPON THE APPLICATION. REFER TO DRAWINGS AND LIGHT FIXTURES SCHEDULE. ALL EGRESS LIGHT FIXTURES SHALL BE SWITCHED OFF WITH OTHER NORMAL-POWERED LIGHT FIXTURES DURING NORMAL OPERATION, BUT POWERED "FULL ON" DURING AN EMERGENCY OPERATION.

ELECTRIC WATER COOLERS AND VENDING MACHINES: PROVIDE A POWER PACK FOR EACH WATER COOLER OR VENDING MACHINE BRANCH CIRCUIT. PROGRAM POWER PACKS TO SWITCH OFF ELECTRIC WATER COOLERS AT 11:00 PM AND BE SWITCHED ON AT 6:00 AM, OR AS OTHERWISE REQUESTED BY THE DISTRICT.

LOW VOLTAGE CABLES: PROVIDE CABLES IN TYPES AND SIZES IN ACCORDANCE WITH ALL MANUFACTURER'S WRITTEN INSTRUCTIONS AND RECOMMENDATIONS. ALL CABLES SHALL BE PLENUM RATED. PROVIDE J-HOOKS WITH RECEIVER CLIPS (CADDY 1243A OR APPROVED EQUIVALENT) ATTACHED TO LIGHT FIXTURE SEISMIC SUPPORT WIRES IN QUANTITIES AS MAY BE REQUIRED FOR ROUTING OF LOW VOLTAGE LIGHTING CONTROL CABLES. REFER TO DETAIL 1/E1111.1. INSTALL SUPPORTS AND CLIPS 12" ABOVE RECESSED LAY-IN LIGHT FIXTURES. SECURE CABLES AT A SPACING OF NOT MORE THAN 60" ON CENTERS. PROVIDE ADDITIONAL DROP WIRES WITH DROP WIRE SUPPORTS OR J-HOOKS AS MAY BE REQUIRED TO 12 FEET SPACING. INSTALLATION SHALL MEET ALL APPLICABLE REQUIREMENTS OF THE NEC 300.11. ALL CABLES SHALL BE ROUTED IN A NEAT WORKMANLIKE MANNER PARALLEL AND OR PERPENDICULAR TO CEILING GRIDS.
SHOP DRAWINGS AND PRODUCT DATA:

PRODUCT DATA: PROVIDE PRODUCT DATA FOR ALL SYSTEM COMPONENTS CLEARLY DELINEATING THE DEVICES WHICH ARE TO BE PROVIDED.

SHOP DRAWINGS: PROVIDE 1/8" SCALED 30" X 42" REVIT DRAWINGS SHOWING THE LIGHTING CONTROL SYSTEM DEVICES PLACED ON THE CEILING AND FLOOR PLANS. OBTAIN REVIT MODEL FROM THE ARCHITECT. DRAWINGS SHALL INCLUDE COMPLETE LINE AND LOW VOLTAGE INTERCONNECTION REQUIREMENTS. PROVIDE SEPARATE LINE AND LOW VOLTAGE DRAWINGS AS MAY BE REQUIRED FOR CLARITY. LOW VOLTAGE DRAWINGS SHALL INCLUDE LENGTHS OF ALL CABLES. INCLUDE COMPLETE WIRING DIAGRAMS, ONE-LINE DIAGRAMS, DETAILS, ETC.

PROGRAMMING SCHEDULES: PROVIDE COMPLETE SEQUENCING AND PROGRAMMING SCHEDULES FOR ALL DEVICES, ZONES, AND SCENES.

RECORD DRAWINGS: AT THE COMPLETION OF THE PROJECT, PROVIDE UPDATED SHOP DRAWINGS INCLUDING ALL CHANGES MADE DURING CONSTRUCTION. INDICATE EXACT LOCATION BY DIMENSION OF ALL POWER PACKS AND OTHER DEVICES MOUNTED ABOVE ACCESSIBLE CEILINGS. PROVIDE A COMPLETE REVIT MODEL IN ELECTRONIC FORMAT.
WARRANTY: WARRANTY ALL WORK INCLUDING PARTS AND LABOR FOR A PERIOD OF ONE YEAR.

COMMISSIONING: COMMISSION EACH PORTION OF THE LIGHTING CONTROL SYSTEMS AT THE COMPLETION OF THE PROJECT TO VERIFY THAT THE SYSTEM PERFORMS AS INTENDED. COORDINATE COMMISSION SERVICES WITH COMMISSIONING AGENT. ASSIST THE OGDEN SCHOOL DISTRICT IN PROGRAMMING AND MAPPING THE SYSTEM FOR INTEGRATION INTO THE BACNET BUILDING MANAGEMENT SYSTEM TO THEIR SATISFACTION.
RETRO-COMMISSIONING: DURING THE ONE YEAR WARRANTY PERIOD, PROVIDE RETRO-COMMISSIONING

SERVICES AT THREE MONTH, SIX MONTH, NINE MONTH, AND ONE YEAR INTERVALS. PROVIDE AT LEAST 8 HOURS OF COMMISSIONING SERVICE FOR EACH OF THE FOUR RETRO-COMMISSIONING PERIODS. THIS WILL INCLUDE MEETING WITH THE OGDEN SCHOOL DISTRICT TO RECEIVE FEEDBACK ON THE SYSTEM AND MAKING CHANGES TO THE SYSTEM INCLUDING PROGRAMMING, TASK TUNING, ETC.

TRAINING: PROVIDE EIGHT HOURS OF TRAINING FROM A FACTORY TRAINED AND CERTIFIED TECHNICIAN AT THE COMPLETION OF THE PROJECT. SCHEDULE TRAINING WITH THE OGDEN SCHOOL DISTRICT.

BIDDING REQUIREMENTS: BIDDERS SHALL BREAK OUT THE LIGHT FIXTURE PACKAGE SEPARATE FROM THE LIGHTING CONTROL SYSTEM. ALL SPECIAL FEATURES PERTAINING TO LIGHTING CONTROLS ASSOCIATED WITH THE LIGHT FIXTURES SHALL BE CONSIDERED LIGHTING CONTROLS. BIDDERS WHO DO NOT CONFORM TO THIS REQUIREMENT MAY BE DISQUALIFIED.

THE SYSTEM SHALL BE PROGRAMMED TO SWEEP ALL NETWORKED-CONTROLLED LIGHTS OFF AT NIGHT. HOWEVER, OCCUPANCY SENSORS, LOW VOLTAGE SWITCHES, ETC. SHALL BE FULLY OPERATIONAL AFTER THE SWEEP.

THE SYSTEM SHALL VERIFY/CONFIRM THE STATUS (ON/OFF) OF ALL RELAYS AND ZONES. SYSTEM OVERRIDE AND CONTROL OF NETWORKED-CONTROLLED DEVICES SHALL BE MADE AVAILABLE THROUGH INTEGRATION WITH AND SCHEDULING OF THE BUILDING AUTOMATION SYSTEM.

THE SYSTEM SHALL VERIFY/CONFIRM THE STATUS (OPEN/CLOSE) OF ALL BLINDS AND SKYLIGHT LOUVERS. EACH WINDOW SHADE SHALL BE PROGRAMMED TO OPEN EVERY MORNING. WHEN SKYLIGHT LOUVER SHALL BE PROGRAMMED TO OPEN ONE HOUR AFTER THE SKYLIGHT HAS BEEN CLOSED.

THE SYSTEM WILL ALLOW FOR SEPARATE CONTROL AND SHALL VERIFY/CONFIRM STATUS OF DRINKING FOUNTAINS AND VENDING MACHINES.

ALL SCHEDULING SHALL BE MADE BY STRUCTURE WARE VIA THE BUILDING AUTOMATION SYSTEM, NOT THE LIGHTING CONTROL SOFTWARE.

RESETTING OF THE JBOSS SOFTWARE RUNNING ON THE ENTERPRISE SERVER SHALL BE ACCESSIBLE TO OGDEN SCHOOL DISTRICT PERSONNEL.


MHTN
ARCHITECTS
MHTN Architects, Inc.
420 East South Temple
Suite 100
Salt Lake City, Utah 84111
Telephone (801) 595-6700
Telefax (801) 595-6717
www.mhtn.com

ENVISION
ENGINEERING
240 E. MORRIS AVE, SUITE 200
SALT LAKE CITY, UT 84115
P (801) 534-1130
F (801) 534-1080
www.envisioneng.com


# OGDEN SCHOOL DISTRICT
## HORACE MANN ELEMENTARY SCHOOL - RFP 20-012
1300 9TH STREET
OGDEN, UTAH 84404


©2019 MHTN ARCHITECTS, INC.
Contents of this instrument of service are the Project identified from by mhtn architects and its consultants, intended for use on the Project identified from by mhtn architects and its consultants, intended for the design, permitting, bidding and construction of the Project, and the Architects, Inc., grants limited rights to distribute and reproduce the document for the express purpose of the distribution, printing or copying for the Project by others other than those intended. Any other use or reproduction is a violation of the Architects, Inc. copyright.


SEAL

MHTN PROJECT NO. 2019005

Original drawing is 30 x 42. Dimensions contents of the drawing.

REVISIONS
CONTRACTOR TO VERIFY DRAWINGS IN FIELD. USE REFLECT LATEST REVISION ONLY.

| NO. | DATE | DESCRIPTION |
|---|---|---|
| | | |

ISSUE
CONSTRUCTION DOCUMENTS
NOVEMBER 21, 2019

SHEET NAME
LIGHTING CONTROL NARRATIVE

SHEET NUMBER
E-240

C:\Revit 2019 Local Files\2019-005_ELEC-CENTRAL_LV15_ph@mhtn.com
11/20/2019 2:42:39 AM