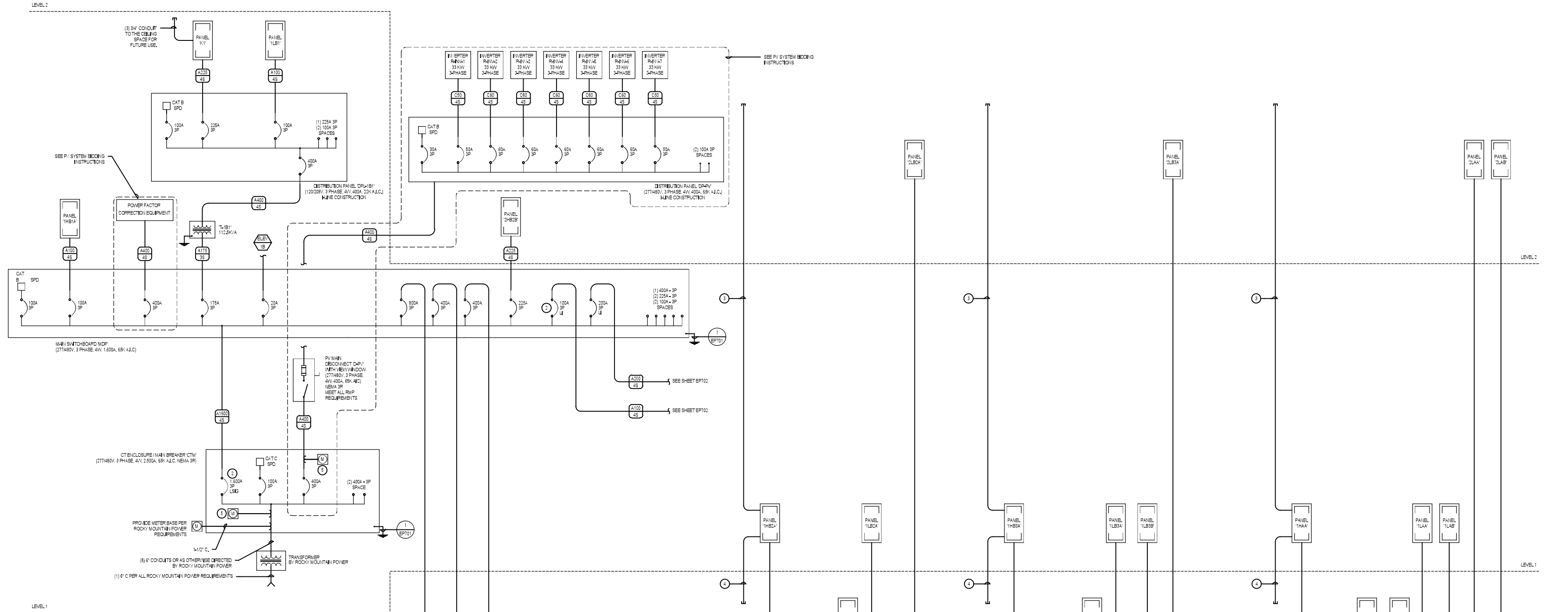

PV SYSTEM - BIDDING INSTRUCTIONS

BASE BID:
THE BASE BID SHALL INCLUDE THE 400A CIRCUIT BREAKER IN CT ENCLOSURE, FEEDER CONDUITS FOR THE AC PV DISTRIBUTION SYSTEM AND BRANCH CIRCUIT CONDUITS FOR THE FUTURE INVERTERS STUBBED TO THE UNDERSIDE OF THE ROOF AND CAPPED FOR FUTURE INSTALLATION. COORDINATE EXACT STUB UP LOCATIONS WITH THE ELECTRICAL ENGINEER. BASE BID SHALL INCLUDE PROVISIONS IN ROOFING WARRANTY TO ALLOW INSTALLATION OF SYSTEM WITHOUT VOIDING OR AFFECTING OWNER'S WARRANTY RIGHTS. BASE BID IS TO ALSO INCLUDE CONDUIT BETWEEN 'MDP' AND THE POWER FACTOR CORRECTION EQUIPMENT.

ALTERNATE #1:
PROVIDE THE COST FOR THE ROOFTOP PHOTOVOLTAIC SYSTEM AS INDICATED ON THIS SHEET AND AS SPECIFIED IN SECTION 26 3202, "TURNKEY ROOFTOP PHOTOVOLTAIC COLLECTORS (ROOFTOP)". THE COST SHALL ALSO INCLUDE THE SLIP SHEETS AT ROOFING. THE COST SHALL ALSO INCLUDE THE SOLAR PANELS AND INVERTERS SHOWN ON THE SOLAR ROOF PLAN, SEE SHEET EP-103.PV. ALTERNATE #1 SHALL ALSO INCLUDE THE POWER FACTOR CORRECTION EQUIPMENT SHOWN.

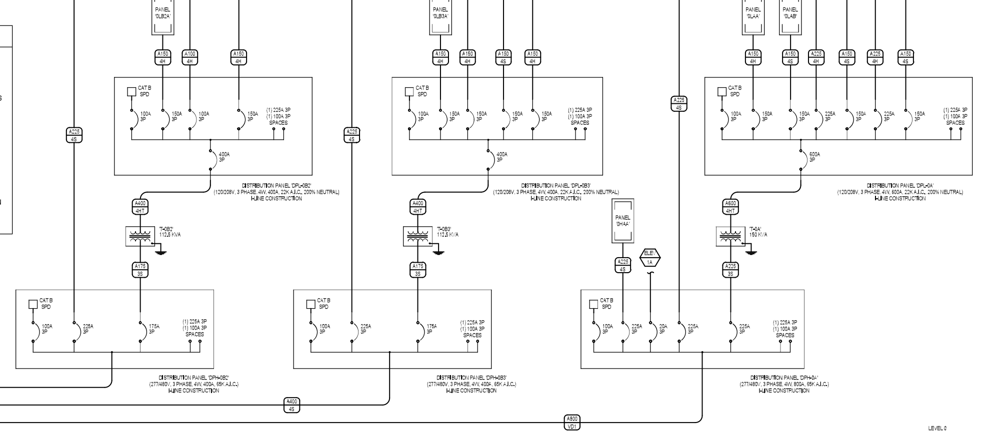

ONE-LINE DIAGRAM - NORMAL POWER
SCALE: NONE

SELECTIVE COORDINATION REQUIREMENTS:

A. CONTRACTOR SHALL PROVIDE ALL OF THE FOLLOWING FOR EMERGENCY, LEGALLY REQUIRED STANDBY, AND OPTIONAL STANDBY POWER SYSTEMS:
 a. FAULT CURRENT ANALYSIS.
 b. ARC-FLASH STUDY.
 c. SELECTIVE COORDINATION STUDY AND SETTINGS OF ALL ADJUSTABLE TRIP OVERCURRENT PROTECTION DEVICES.

B. THE SELECTIVE COORDINATION OF THE SYSTEM (DOWN TO THE SMALLEST OVERCURRENT PROTECTIVE DEVICE) SHALL BE COORDINATED TO A LEVEL OF 0.1 SECONDS.

C. CONTRACTOR SHALL PROVIDE BUSSMAN QUIK-SPEC FUSIBLE PANELBOARD (OR APPROVED EQUIVALENT), ELECTRONIC SOLID STATE ADJUSTABLE TRIP (LSI) CIRCUIT BREAKERS, AND/OR CIRCUIT BREAKERS WITH LARGER FRAME SIZES AS NECESSARY TO ENSURE PROPER SELECTIVE COORDINATION. REFER TO SPECIFICATIONS FOR ADDITIONAL SELECTIVE COORDINATION REQUIREMENTS ON EMERGENCY, LEGALLY REQUIRED STANDBY, AND OPTIONAL STANDBY POWER SYSTEMS.

D. A PRELIMINARY SELECTIVE COORDINATION STUDY AND DEVICE SETTINGS SHALL BE SUBMITTED FOR REVIEW AND APPROVAL. NO ELECTRICAL EQUIPMENT SUBMITTAL SHALL BE SUBMITTED FOR APPROVAL PRIOR TO SUBMITTING THE PRELIMINARY SELECTIVE COORDINATION STUDY AND DEVICE SETTINGS OF THE PROPOSED ELECTRICAL DISTRIBUTION EQUIPMENT AND ASSOCIATED OVERCURRENT DEVICES. THE STUDY SHALL BE SUBMITTED FOR REVIEW BY THE ELECTRICAL ENGINEER AND OWNER TO ENSURE CONFORMANCE TO THE CONSTRUCTION DOCUMENTS. NO ELECTRICAL DISTRIBUTION EQUIPMENT SHALL BE RELEASED UNTIL THE SELECTIVE COORDINATION STUDY SHOWS PROPER COORDINATION OF ALL SYSTEM ELEMENTS.

E. AT THE END OF THE PROJECT A COMPLETE FAULT CURRENT, ARC-FLASH, AND SELECTIVE COORDINATION STUDY SHALL BE SUBMITTED FOR REVIEW.

F. ONCE PRELIMINARY SELECTIVE COORDINATION STUDY IS COMPLETED, THE WITHSTAND RATING FOR THE AUTOMATIC TRANSFER SWITCHES (ATS) SHALL BE COORDINATED WITH THE SPECIFIC BREAKERS FEEDING ATS THAT ARE PROVIDED.

FEEDER SCHEDULE (1)

FEEDER	# OF SETS	CONDUIT DIAMETER	CONDUCTOR #	CONDUCTOR SIZE	EQ GND COND	ISOLATED GROUND	SYSTEM BONDING JUMPER
C30,3S	1	0.75	3	10	10	-	-
C30,3VD1	1	2	3	1/0	1/0		
C30,3VD2	1	1.25	3	4	4		
C30,4S	1	0.75	4	10	10	-	-
C50,3S	1	1	3	6	10	-	-
C50,3VD1	1	3	3	1	8	-	-
C50,3VD2	1	3	2	1	6	-	-
C50,4S	1	1	4	6	10	-	-
C50,4VD1	1	1.25	4	4	8	-	-
C50,4VD2	1	1.25	4	3	6	-	-
C50,4T	1	1	4	6	-	-	8
C60,4T	1	1.25	4	4	-	-	8
C60,4S	1	1.25	4	4	10	-	-
C60,4VD1	1	1.5	4	3	8		
C60,4VD2	1	2	4	2	8	-	-
C70,3S	1	1.25	3	4	8	-	-
C70,4S	1	1.25	4	4	8	-	-
A100,2S	1	1.5	2	1/0	8	-	-
A100,3S	1	1.5	3	1/0	8	-	-
A100,4S	1	2	4	1/0	8	-	-
A100,4H	1	2	5	1/0	8	-	-
A100,4HT	1	2	5	1/0	-	-	6
A100,3VD1	1	2	3	2/0	6		
A100,4VD1	1	2.5	4	250	4	-	-
A100,4T	1	2	5	1/0	-	-	6
A110,4T	1	1.5	4	2	-	-	6
A110,4HT	1	2	5	1/0	-	-	6
A125,3S	1	2	3	2/0	6	-	-
A150,3S	1	2	3	3/0	6	-	-
A150,4S	1	2.5	4	3/0	6	-	-
A150,4H	1	2.5	5	4/0	4	-	-
A150,4VD1	1	2.5	4	4/0	4	-	-
A150,3T	1	2.5	3	4/0	-	-	2
A150,4T	1	2.5	4	4/0	-	-	4
A175,3S	1	2	3	4/0	6	-	-
A175,4S	1	2.5	4	4/0	6	-	-
A175,4H	1	3	5	250	4	-	-
A175,4HT	1	3	5	250	-	-	4
A175,4T	1	2	4	2/0	-	-	4
A200,3S	1	2.5	3	250	6	-	-
A200,4S	1	2.5	4	250	6	-	-
A200,4H	1	3	5	300	4	-	-
A200,4HT	1	3	5	300	-	-	2
A200,4VD1	1	3	4	300	4		
A200,4T	1	3	4	300	-	-	2
A225,3S	1	2.5	3	300	4	-	-
A225,4S	1	3	4	300	4	-	-
A225,4H	1	3	5	350	3	-	-
A225,4VD1	1	4	4	350	3	-	-
A225,4T	1	3	4	350	-	-	2
A250,3S	1	2.5	3	350	4	-	-
A250,4S	1	3	4	350	4	-	-
A250,4H	1	3.5	5	400	3	-	-
A250,4VD1	1	3	4	400	3	-	-
A300,3S	1	3	3	500	4	-	-
A300,4S	1	3.5	4	500	4	-	-
A300,4H	1	4	5	600	3	-	-
A300,4HT	1	4	5	600	-	-	1/0
A300,4T	2	2.5	4	3/0	-	-	2
A300,4VD1	2	4	4	600	2/0		
A350,3S	2	2.5	3	250	3	-	-
A350,4S	2	2.5	4	250	3	-	-
A350,4H	2	3	5	300	3	-	-
A400,3S	2	2.5	3	250	3	-	-
A400,4S	2	2.5	4	250	3	-	-
A400,4H	2	3	5	300	2	-	-
A400,4HT	2	3	5	300	-	-	1/0
A400,4VD1	2	3	4	400	1	-	-
A400,4T	2	3	4	300	-	-	1/0
A500,3S	2	2.5	3	350	2	-	-
A500,4S	2	3	4	350	2	-	-
A500,4H	2	3.5	5	400	1	-	-
A600,3S	3	2.5	3	250	1	-	-
A600,4S	3	2.5	4	250	1	-	-
A600,4H	3	3	5	300	1/0	-	-
A600,4VD1	3	3	4	500	250	-	-
A600,4VD2	3	3	4	750	350	-	-
A600,3VD1	3	2.5	3	300	2/0	-	-
A600,4T	3	3	4	300	-	-	2/0
A800,3S	4	2.5	3	250	1/0	-	-
A800,4S	4	2.5	4	250	1/0	-	-
A800,4H	4	3	5	300	2/0	-	-
A800,4HT	4	3	5	300	-	-	3/0
A800,4T	4	3	4	300	-	-	3/0
A1000,3S	4	3	3	350	2/0	-	-
A1000,4S	4	3	4	350	2/0	-	-
A1000,4H	4	3.5	5	400	4/0	-	-
A1000,4VD1	4	3.5	4	400	3/0		
A1200,4S	4	3.5	4	500	3/0	-	-
A1200,4H	4	4	5	600	4/0	-	-
A1200,4T	4	4	4	600	-	-	4/0
A1200,4HT	4	4	5	600	-	-	4/0
A1600,4S	5	3.5	4	500	4/0	-	-
A1600,4H	5	NA	5	600	250	-	-
A1600,4T	5	4	4	600	-	-	4/0
A2000,4S	8	3	4	350	250	-	-
A2000,4H	8	3.5	5	400	350	-	-
A2500,4S	8	4	4	600	350	-	-
A2500,4H	9	4	5	500	400	-	-
A3000,4S	10	3.5	4	500	400	-	-
A3000,4H	11	4	5	500	500	-	-
A4000,4S	12	4	4	600	500	-	-
A4000,4H	14	NA	5	600	600	-	-

VOLTAGE DROP UPSIZING CHART FOR 20 AMP, SINGLE PHASE BRANCH CIRCUITS

120 VOLTS

LENGTH (FT)	CONDUCTOR SIZE	CONDUIT SIZE
0-80	(3) #12	3/4"
81-125	(3) #10	3/4"
126-200	(3) #8	3/4"
201-320	(3) #6	1"
>320	(3) #4	1-1/2"

277 VOLTS

LENGTH (FT)	CONDUCTOR SIZE	CONDUIT SIZE
0-130	(3) #12	3/4"
131-215	(3) #10	3/4"
216-330	(3) #8	3/4"
331-530	(3) #6	1"
>530	(3) #4	1-1/2"

PROVIDE BRANCH CIRCUIT CONDUCTORS IN SIZES SUCH THAT VOLTAGE DROP FOR BRANCH CIRCUITS DO NOT EXCEED 3 PERCENT AT THE FARTHEST OUTLET. INCREASE CONDUCTOR SIZES (AND CONDUITS WHERE TO COMPLY WITH NEC CONDUIT FILL REQUIREMENTS) AS NECESSARY TO ACCOMMODATE THIS REQUIREMENT. CALCULATIONS SHALL BE BASED ON THE FOLLOWING:

1. LIGHTING BRANCH CIRCUITS: CONNECTED LOAD PLUS 25% SPARE
2. APPLIANCE AND EQUIPMENT BRANCH CIRCUITS: NAMEPLATE OR NEC REQUIRED LOAD.
3. 120V CONVENIENCE OUTLET BRANCH CIRCUITS - AS PER TABLE ABOVE.
3. 277V LIGHTING BRANCH CIRCUITS - AS PER TABLE ABOVE.
4. USE THE NEC METHOD TO CALCULATE VOLTAGE DROP.

FEEDER CALLOUT LEGEND:

C50 / 3S

C=COPPER, A=ALUMINUM — AMPERAGE — NUMBER OF WIRE

S = STANDARD
H = HARMONICS ON NEUTRAL
IG = ISOLATED GROUND
T = TRANSFORMER
DN = 200% NEUTRAL
(REFER TO FEEDER SCHEDULE)

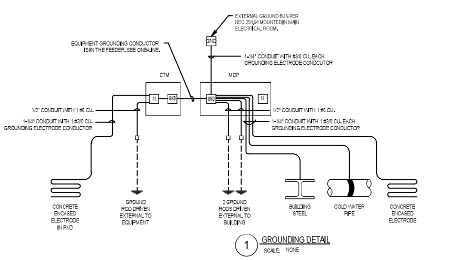

(1) GROUNDING DETAIL
SCALE: NONE

TRANSFORMER SCHEDULE

NAME	TYPE	KVA	PRIMARY VOLTAGE	PRIMARY CONNECTION	SECONDARY VOLTAGE	SECONDARY CONNECTION	GROUNDING ELECTRODE CONDUCTOR SIZE	GROUNDING ELECTRODE CONDUCTOR TYPE	K FACTOR	ELECTRO-STATIC SHIELD	MOUNTING	REMARKS
T-0A	HIGH-EFFICIENCY, US DEPARTMENT OF ENERGY CSL-3	150	480	DELTA	120/208	WYE	#2/0, 1-1/4" C.	THHN, CU / EMT	4	NO	FLOOR	POWERSMITHS ESAVER C3L OR PRIOR-APPROVED EQUIVALENT
T-0B2	HIGH-EFFICIENCY, US DEPARTMENT OF ENERGY CSL-3	112.5	480	DELTA	120/208	WYE	#1/0, 1-1/4" C.	THHN, CU / EMT	4	NO	FLOOR	POWERSMITHS ESAVER C3L OR PRIOR-APPROVED EQUIVALENT
T-0B3	HIGH-EFFICIENCY, US DEPARTMENT OF ENERGY CSL-3	112.5	480	DELTA	120/208	WYE	#1/0, 1-1/4" C.	THHN, CU / EMT	4	NO	FLOOR	POWERSMITHS ESAVER C3L OR PRIOR-APPROVED EQUIVALENT
T-1B1	HIGH-EFFICIENCY, US DEPARTMENT OF ENERGY CSL-3	112.5	480	DELTA	120/208	WYE	#1/0, 1-1/4" C.	THHN, CU / EMT	4	NO	FLOOR	POWERSMITHS ESAVER C3L OR PRIOR-APPROVED EQUIVALENT

KEYED NOTES: (#)

1. ALL EQUIPMENT GROUNDS, ISOLATED GROUNDS AND SYSTEM BONDING JUMPERS SHALL BE COPPER.
2. PROVIDE BREAKERS IN SIZES, RATINGS, AND TYPES AS MAY BE REQUIRED TO ACHIEVE A SELECTIVELY COORDINATED SYSTEM TO THE .1 SEC LEVEL. PROVIDE A COORDINATION STUDY WITH PROPOSED BREAKER SETTINGS TO DOCUMENT DEGREE OF SELECTIVE COORDINATION, SET BREAKERS PER STUDY.
3. EXTEND TWO (2) 3/4" CONDUITS TO ELECTRICAL ROOM ABOVE FOR FUTURE USE.
4. EXTEND TWO (2) 3/4" CONDUITS TO ELECTRICAL ROOM BELOW FOR FUTURE USE.
5. PROVIDE BACNET COMPATIBLE METER. REFER TO DETAIL 1/EP502 AND 2/EP502. LOCATE IN METER CABINET IN MAIN ELECTRICAL ROOM.

GENERAL NOTES:

1. THE ELECTRICAL CONTRACTOR SHALL VERIFY THE AVAILABLE FAULT CURRENT WITH THE ROCKY MOUNTAIN POWER PRIOR TO BIDDING AND PROVIDE EQUIPMENT RATED ACCORDINGLY. SUBMIT FAULT CURRENT CALCULATIONS WITH SHOP DRAWINGS SUBMITTAL.
2. PROVIDE FULL LENGTH VERTICAL BUSSING IN ALL SWITCHBOARDS, DISTRIBUTION PANELBOARDS AND PANELBOARDS.
3. COORDINATE SPACE WITH ALL OTHER TRADES TO MAINTAIN ALL CODE-REQUIRED CLEARANCES.
4. ADJUST THE VERTICAL ALIGNMENT (UP TO 5' DOWNWARD) AND HORIZONTAL ALIGNMENT (UP TO 10' IN EITHER DIRECTION) ALONG NEW DUCTBANK ROUTES TO AVOID EXISTING UTILITIES AT NO ADDITIONAL COST TO THE OWNER.
5. CONTRACTOR SHALL UPSIZE ALL FEEDER FOR VOLTAGE DROP PER NEC REQUIREMENTS WETHER SHOWN OR NOT.

GENERAL NOTES:

6. ALL OVERCURRENT PROTECTIVE DEVICES SHALL BE THE SAME FAULT CURRENT RATING AS THE RATING OF THE PANEL OR SWITCHBOARD THEY ARE LOCATED IN.
7. THE ELECTRICAL CONTRACTOR SHALL PROVIDE A LABEL ON ALL PANELBOARDS, DISTRIBUTION PANELS, SWITCHBOADS AND TRANSFORMERS INDICATING THE ARC-FLASH HAZARD. LABEL SHALL MEET THE REQUIREMENTS OF NEC 110.16. LABELS ARE PROVIDED BY THE GEAR MANUFACTURE AND ARE BASED ON THE OVERCURRENT PROTECTIVE DEVICE COORDINATION STUDY. LABELS ARE INSTALLED IN THE FIELD BY THE CONTRACTOR.
8. THE ELECTRICAL CONTRACTOR SHALL PROVIDE A LAMINATE LABEL ON PANEL CTM INDICATING THE MAXIMUM AVAILABLE FAULT CURRENT AT THE PANEL. THE ELECTRICAL CONTRACTOR SHALL PROVIDE ALL REQUIRED CALCULATIONS BASED ON THE EXACT UTILITY TRANSFORMER USED ON THE PROJECT. THE LABEL SHALL INCLUDE THE DATE THE CALCULATIONS WHERE COMPLETED. THE MAXIMUM AVAILABLE FAULT CURRENT AND OTHER INFORMATION AS REQUIRED BY NEC 110.24. THE CALCULATION SHALL BE DOCUMENTED AND MADE AVAILABLE TO THOSE AUTHORIZED TO DESIGN, INSTALL, INSPECT, MAINTAIN OR OPERATE THE SYSTEM.

GENERAL NOTES:

9. CONTRACTOR SHALL TEST THE GROUND FAULT FUNCTION OF THE MAIN BUILDING DISCONNECT AND SET TO CORRECT SETTING. ALL TEST RESULTS SHALL BE SUBMITTED TO THE AHJ AND OWNER PRIOR TO POWER TO PANEL INSPECTION AND OR METER RELEASE.
10. ALL SYSTEM BONDING JUMPER CONDUCTORS SHOWN ARE TO BE RUN IN EACH PARALLEL FEEDER SET.
11. CONTRACTOR SHALL REVIEW ONE-LINE DIAGRAM AND CONFIRM FEEDER WIRE SIZES. ANY DISCREPANCIES SHALL BE REPORTED TO THE ENGINEER PRIOR TO BID. IF DISCREPANCIES EXIST, CONTRACTOR SHALL PROVIDE CORRECT WIRE SIZE BASED ON ACTUAL BREAKER SIZE AND ANY VOLTAGE DROP ADJUSTMENTS. SEE NEC 210.19, 215.2, 250.112, AND 310.15.
12. ALL GROUNDING WIRES SHOWN IN FEEDER SCHEDULE ARE COPPER WIRES.

FFKR ARCHITECTS
730 Pacific Avenue • Salt Lake City, Utah 84104
O 801.521.6186 • FFKR.COM

ENVISION ENGINEERING
240 E. MORRIS AVE, SUITE 200
SALT LAKE CITY, UT 84115
P (801) 534-1130
F (801) 534-1080
www.envisioneng.com

POLK ELEMENTARY RENOVATION
2615 POLK AVE, OGDEN, UTAH 84401
OGDEN SCHOOL DISTRICT
CONSTRUCTION DOCUMENTS - FEBURARY 28, 2020

PROFESSIONAL ENGINEER — JEFFREY R. OWEN — No.177411 — REGISTERED — STATE OF UTAH

△ DATE REVISION

PROJECT NUMBER 19030

ONE-LINE DIAGRAM - NORMAL POWER

EP701

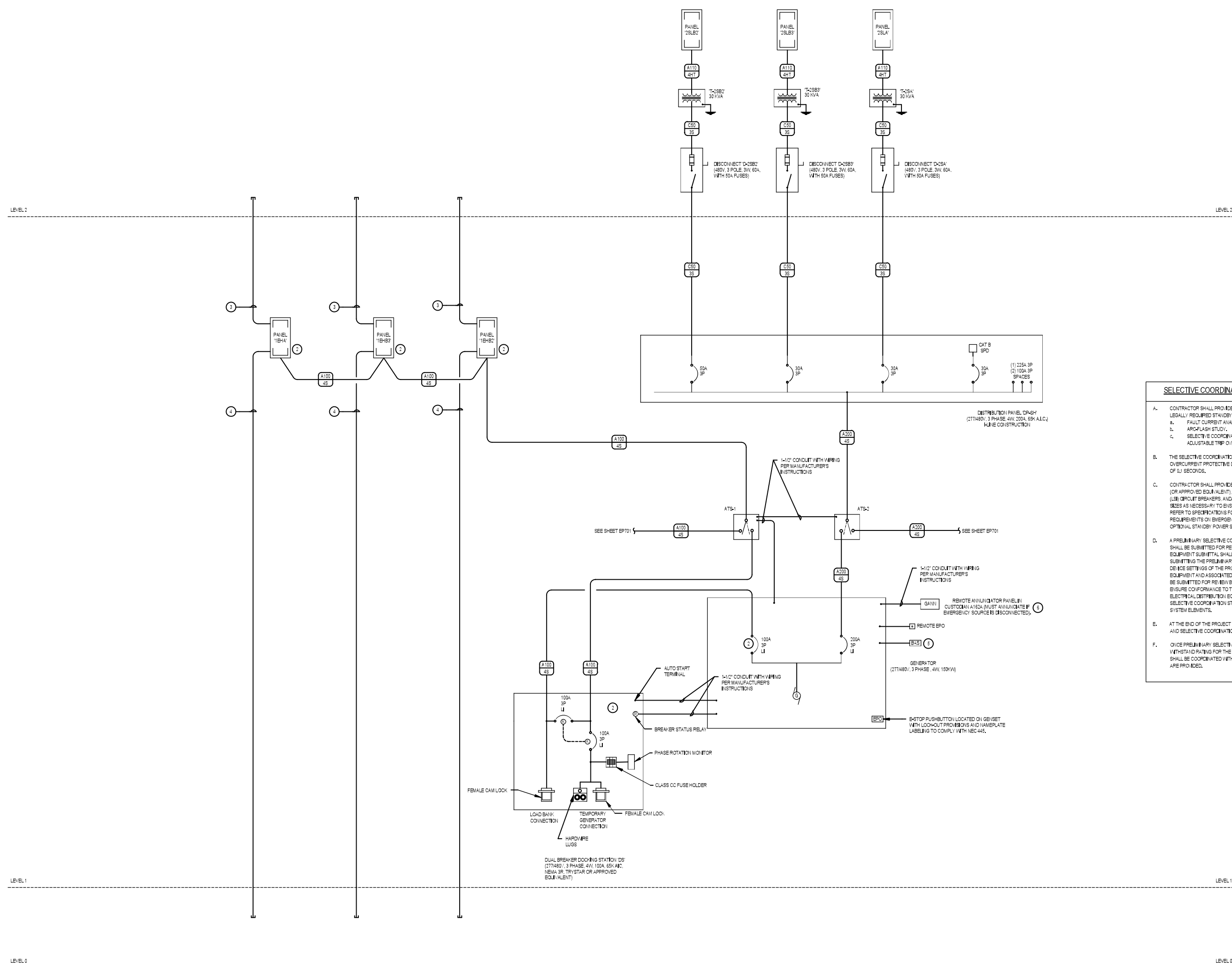

ONE-LINE DIAGRAM - GENERATOR POWER

SCALE: NONE

SELECTIVE COORDINATION REQUIREMENTS:

A. CONTRACTOR SHALL PROVIDE ALL OF THE FOLLOWING FOR EMERGENCY, LEGALLY REQUIRED STANDBY, AND OPTIONAL STANDBY POWER SYSTEMS:
   a. FAULT CURRENT ANALYSIS.
   b. ARC-FLASH STUDY.
   c. SELECTIVE COORDINATION STUDY AND SETTINGS OF ALL ADJUSTABLE TRIP OVERCURRENT PROTECTION DEVICES.

B. THE SELECTIVE COORDINATION OF THE SYSTEM (DOWN TO THE SMALLEST OVERCURRENT PROTECTIVE DEVICE) SHALL BE COORDINATED TO A LEVEL OF 0.1 SECONDS.

C. CONTRACTOR SHALL PROVIDE BUSSMAN QUIK-SPEC FUSIBLE PANELBOARD (OR APPROVED EQUIVALENT), ELECTRONIC SOLID STATE ADJUSTABLE TRIP (LSI) CIRCUIT BREAKERS, AND/OR CIRCUIT BREAKERS WITH LARGER FRAME SIZES AS NECESSARY TO ENSURE PROPER SELECTIVE COORDINATION. REFER TO SPECIFICATIONS FOR ADDITIONAL SELECTIVE COORDINATION REQUIREMENTS ON EMERGENCY, LEGALLY REQUIRED STANDBY, AND OPTIONAL STANDBY POWER SYSTEMS.

D. A PRELIMINARY SELECTIVE COORDINATION STUDY AND DEVICE SETTINGS SHALL BE SUBMITTED FOR REVIEW AND APPROVAL. NO ELECTRICAL EQUIPMENT SUBMITTAL SHALL BE SUBMITTED FOR APPROVAL PRIOR TO SUBMITTING THE PRELIMINARY SELECTIVE COORDINATION STUDY AND DEVICE SETTINGS OF THE PROPOSED ELECTRICAL DISTRIBUTION EQUIPMENT AND ASSOCIATED OVERCURRENT DEVICES. THE STUDY SHALL BE SUBMITTED FOR REVIEW BY THE ELECTRICAL ENGINEER AND OWNER TO ENSURE CONFORMANCE TO THE CONSTRUCTION DOCUMENTS. NO ELECTRICAL DISTRIBUTION EQUIPMENT SHALL BE ELEASED UNTIL THE SELECTIVE COORDINATION STUDY SHOWS PROPER COORDINATION OF ALL SYSTEM ELEMENTS.

E. AT THE END OF THE PROJECT A COMPLETE FAULT CURRENT, ARC-FLASH, AND SELECTIVE COORDINATION STUDY SHALL BE SUBMITTED FOR REVIEW.

F. ONCE PRELIMINARY SELECTIVE COORDINATION STUDY IS COMPLETED, THE WITHSTAND RATING FOR THE AUTOMATIC TRANSFER SWITCHES (ATS) SHALL BE COORDINATED WITH THE SPECIFIC BREAKERS FEEDING ATS THAT ARE PROVIDED.

FEEDER SCHEDULE

FEEDER	# OF SETS	CONDUIT DIAMETER	CONDUCTOR #	CONDUCTOR SIZE	EQ GND COND	ISOLATED GROUND	SYSTEM BONDING JUMPER
C30.3S	1	0.75	3	10	10	-	-
C30.3VD1	1	2	3	1/0	1/0		
C30.3VD2	1	1.25	3	4	4		
C30.4S	1	0.75	4	10	10	-	-
C50.3S	1	1	3	6	10	-	-
C50.3VD1	1	3	3	1	8	-	-
C50.3VD2	1	3	2	1	6	-	-
C50.4S	1	1	4	6	10	-	-
C50.4VD1	1	1.25	4	4	8	-	-
C50.4VD2	1	1.25	4	3	6	-	-
C50.4T	1	1	4	6	-	-	8
C60.4T	1	1.25	4	4	-	-	8
C60.4S	1	1.25	4	4	10	-	-
C60.4VD1	1	1.5	4	3	8		
C60.4VD2	1	2	4	2	8	-	-
C70.3S	1	1.25	3	4	8	-	-
C70.4S	1	1.25	4	4	8	-	-
A100.2S	1	1.5	2	1/0	8	-	-
A100.3S	1	1.5	3	1/0	8	-	-
A100.4S	1	2	4	1/0	8	-	-
A100.4H	1	2	5	1/0	8	-	-
A100.4HT	1	2	5	1/0	-	-	6
A100.37D1	1	2	3	2/0	6		
A100.47D1	1	2.5	4	250	4	-	-
A100.4T	1	2	5	1/0	-	-	6
A110.4T	1	1.5	4	2	-	-	6
A110.4HT	1	2	5	1/0	-	-	6
A125.3S	1	2	3	2/0	6	-	-
A150.3S	1	2	3	3/0	6	-	-
A150.4S	1	2.5	4	3/0	6	-	-
A150.4H	1	2.5	5	4/0	4	-	-
A150.47D1	1	2.5	4	4/0	4	-	-
A150.3T	1	2.5	3	4/0	-	-	2
A150.4T	1	2.5	4	4/0	-	-	4
A175.3S	1	2	3	4/0	6	-	-
A175.4S	1	2.5	4	4/0	6	-	-
A175.4H	1	3	5	250	4	-	-
A175.4HT	1	3	5	250	-	-	4
A175.4T	1	2	4	2/0	-	-	4
A200.3S	1	2.5	3	250	6	-	-
A200.4S	1	2.5	4	250	6	-	-
A200.4H	1	3	5	300	4	-	-
A200.4HT	1	3	5	300	-	-	2
A200.47D1	1	3	4	300	4		
A200.4T	1	3	4	300	-	-	2
A225.3S	1	2.5	3	300	4	-	-
A225.4S	1	3	4	300	4	-	-
A225.4H	1	3	5	350	3	-	-
A225.47D1	1	4	4	350	3	-	-
A225.4T	1	3	4	350	-	-	2
A250.3S	1	2.5	3	350	4	-	-
A250.4S	1	3	4	350	4	-	-
A250.4H	1	3.5	5	400	3	-	-
A250.47D1	1	3	4	400	3	-	-
A300.3S	1	3	3	500	4	-	-
A300.4S	1	3.5	4	500	4	-	-
A300.4H	1	4	5	600	3	-	-
A300.4HT	1	4	5	600	-	-	1/0
A300.4T	2	2.5	4	3/0	-	-	2
A300.47D1	2	4	4	600	2/0		
A350.3S	2	2.5	3	250	3	-	-
A350.4S	2	2.5	4	250	3	-	-
A350.4H	2	3	5	300	3	-	-
A400.3S	2	2.5	3	250	3	-	-
A400.4S	2	2.5	4	250	3	-	-
A400.4H	2	3	5	300	2	-	-
A400.4HT	2	3	5	300	-	-	1/0
A400.47D1	2	3	4	400	1	-	-
A400.4T	2	3	4	300	-	-	1/0
A500.3S	2	2.5	3	350	2	-	-
A500.4S	2	3	4	350	2	-	-
A500.4H	2	3.5	5	400	1	-	-
A600.3S	3	2.5	3	250	1	-	-
A600.4S	3	2.5	4	250	1	-	-
A600.4H	3	3	5	300	1/0	-	-
A600.47D1	3	3	4	500	250	-	-
A600.47D2	3	3	4	750	350	-	-
A600.37D1	3	2.5	3	300	2/0	-	-
A600.4T	3	3	4	300	-	-	2/0
A800.3S	4	2.5	3	250	1/0	-	-
A800.4S	4	2.5	4	250	1/0	-	-
A800.4H	4	3	5	300	2/0	-	-
A800.4HT	4	3	5	300	-	-	3/0
A800.4T	4	3	4	300	-	-	3/0
A1000.3S	4	3	3	350	2/0	-	-
A1000.4S	4	3	4	350	2/0	-	-
A1000.4H	4	3.5	5	400	4/0	-	-
A1000.4VD1	4	3.5	4	400	3/0		
A1200.4S	4	3.5	4	500	3/0	-	-
A1200.4H	4	4	5	600	4/0	-	-
A1200.4T	4	4	4	600	-	-	4/0
A1200.4HT	4	4	5	600	-	-	4/0
A1600.4S	5	3.5	4	500	4/0	-	-
A1600.4H	5	NA	5	600	250	-	-
A1600.4T	5	4	4	600	-	-	4/0
A2000.4S	8	3	4	350	250	-	-
A2000.4H	8	3.5	5	400	350	-	-
A2500.4S	8	4	4	600	350	-	-
A2500.4H	9	4	5	500	400	-	-
A3000.4S	10	3.5	4	500	400	-	-
A3000.4H	11	4	5	500	500	-	-
A4000.4S	12	4	4	600	500	-	-
A4000.4H	14	NA	5	600	600	-	-

FEEDER CALLOUT LEGEND:

C50 / 3S ← C50.4S

C=COPPER, A=ALUMINUM
AMPERAGE
NUMBER OF WIRE
S = STANDARD
H = HARMONICS ON NEUTRAL
IG = ISOLATED GROUND
T = TRANSFORMER
ON = 200% NEUTRAL (REFER TO FEEDER SCHEDULE)

VOLTAGE DROP UPSIZING CHART FOR 20 AMP, SINGLE PHASE BRANCH CIRCUITS

120 VOLTS

LENGTH (FT)	CONDUCTOR SIZE	CONDUIT SIZE
0-80	(3) #12	3/4"
81-125	(3) #10	3/4"
126-200	(3) #8	3/4"
201-320	(3) #6	1"
>320	(3) #4	1-1/2"

277 VOLTS

LENGTH (FT)	CONDUCTOR SIZE	CONDUIT SIZE
0-130	(3) #12	3/4"
131-215	(3) #10	3/4"
216-330	(3) #8	3/4"
331-530	(3) #6	1"
>530	(3) #4	1-1/2"

PROVIDE BRANCH CIRCUIT CONDUCTORS IN SIZES SUCH THAT VOLTAGE DROP FOR BRANCH CIRCUITS DO NOT EXCEED 3 PERCENT AT THE FARTHEST OUTLET. INCREASE CONDUCTOR SIZES (AND CONDUITS WHERE TO COMPLY WITH NEC CONDUIT FILL REQUIREMENTS) AS NECESSARY TO ACCOMMODATE THIS REQUIREMENT. CALCULATIONS SHALL BE BASED ON THE FOLLOWING:

1. LIGHTING BRANCH CIRCUITS: CONNECTED LOAD PLUS 25% SPARE
2. APPLIANCE AND EQUIPMENT BRANCH CIRCUITS: NAMEPLATE OR NEC REQUIRED LOAD.
3. 120V CONVENIENCE OUTLET BRANCH CIRCUITS - AS PER TABLE ABOVE.
3. 277V LIGHTING BRANCH CIRCUITS - AS PER TABLE ABOVE.
4. USE THE NEC METHOD TO CALCULATE VOLTAGE DROP.

TRANSFORMER SCHEDULE

NAME	TYPE	KVA	PRIMARY VOLTAGE	PRIMARY CONNECTION	SECONDARY VOLTAGE	SECONDARY CONNECTION	GROUNDING ELECTRODE CONDUCTOR SIZE	GROUNDING ELECTRODE CONDUCTOR TYPE	K FACTOR	ELECTRO-STATIC SHIELD	MOUNTING	REMARKS
T-2SA	HIGH-EFFICIENCY, US DEPARTMENT OF ENERGY CSL-3	30	480	DELTA	120/208	WYE	#6, 1" C.	THHN, CU./ EMT	13	YES	SUSPENDED	POWERSMITHS E-SAVER C3L OR PRIOR-APPROVED EQUIVALENT
T-2SA	HIGH-EFFICIENCY, US DEPARTMENT OF ENERGY CSL-3	30	480	DELTA	120/208	WYE	#6, 1" C.	THHN, CU./ EMT	13	YES	SUSPENDED	POWERSMITHS E-SAVER C3L OR PRIOR-APPROVED EQUIVALENT
T-2SA	HIGH-EFFICIENCY, US DEPARTMENT OF ENERGY CSL-3	30	480	DELTA	120/208	WYE	#6, 1" C.	THHN, CU./ EMT	13	YES	SUSPENDED	POWERSMITHS E-SAVER C3L OR PRIOR-APPROVED EQUIVALENT

TRANSFER SWITCH SCHEDULE

NAME	TYPE	VOLTAGE	POLES	WIRES	AMPERAGE	SHORT CIRCUIT CURRENT RATING WITH BREAKER	SHORT CIRCUIT CURRENT RATING WITH FUSE	NEMA RATING	TRANSFER DELAY
ATS-1	AUTOMATIC	277/480	4	4	300	65,000	N/A	1	10 SECONDS
ATS-2	AUTOMATIC	277/480	4	4	300	65,000	N/A	1	20 SECONDS

KEYED NOTES:

1. ALL EQUIPMENT GROUNDS, ISOLATED GROUNDS AND SYSTEM BONDING JUMPERS SHALL BE COPPER.
2. PROVIDE BREAKERS IN SIZES, RATINGS, AND TYPES AS MAY BE REQUIRED TO ACHIEVE A SELECTIVELY COORDINATED SYSTEM TO THE .1 SEC LEVEL. PROVIDE A COORDINATION STUDY WITH PROPOSED BREAKER SETTINGS TO DOCUMENT DEGREE OF SELECTIVE COORDINATION. SET BREAKERS PER STUDY.
3. EXTEND TWO (2) 3/4" CONDUITS TO ELECTRICAL ROOM ABOVE FOR FUTURE USE.
4. EXTEND TWO (2) 3/4" CONDUITS TO ELECTRICAL ROOM BELOW FOR FUTURE USE.
5. PROVIDE NETWORK CONNECTION TO MONITOR THE GENERATOR. SEE SPECIFICATION FOR REQUIREMENTS.
6. PROVIDE ALL REQUIRED EQUIPMENT AND WIRING TO COMPLY WITH NEC 700.3 REQUIREMENTS TO ANNUNCIATE GENERATOR CONNECTION PANEL STATUS WHEN PERMANENT EMERGENCY GENERATOR IS NOT AVAILABLE DUE TO MANUAL SWITCHING OF PANEL.

GENERAL NOTES:

1. THE ELECTRICAL CONTRACTOR SHALL VERIFY THE AVAILABLE FAULT CURRENT WITH THE ROCKY MOUNTAIN POWER PRIOR TO BIDDING AND PROVIDE EQUIPMENT RATED ACCORDINGLY. SUBMIT FAULT CURRENT CALCULATIONS WITH SHOP DRAWINGS SUBMITTAL.
2. PROVIDE FULL LENGTH VERTICAL BUSSING IN ALL SWITCHBOARDS, DISTRIBUTION PANELBOARDS AND PANELBOARDS.
3. COORDINATE SPACE WITH ALL OTHER TRADES TO MAINTAIN ALL CODE-REQUIRED CLEARANCES.
4. ADJUST THE VERTICAL ALIGNMENT (UP TO 5' DOWNWARD) AND HORIZONTAL ALIGNMENT (UP TO 10' IN EITHER DIRECTION) ALONG NEW DUCTBANK ROUTES TO AVOID EXISTING UTILITIES AT NO ADDITIONAL COST TO THE OWNER.
5. CONTRACTOR SHALL UPSIZE ALL FEEDER FOR VOLTAGE DROP PER NEC REQUIREMENTS WETHER SHOWN OR NOT.

GENERAL NOTES:

6. ALL OVERCURRENT PROTECTIVE DEVICES SHALL BE THE SAME FAULT CURRENT RATING AS THE RATING OF THE PANEL OR SWITCHBOARD THEY ARE LOCATED IN.
7. THE ELECTRICAL CONTRACTOR SHALL PROVIDE A LABEL ON ALL PANELBOARDS, DISTRIBUTION PANELS, SWITCHBOADS AND TRANSFORMERS INDICATING THE ARC-FLASH HAZARD. LABEL SHALL MEET THE REQUIREMENTS OF NEC 110.16. LABELS ARE PROVIDED BY THE GEAR MANUFACTURE AND ARE BASED ON THE OVERCURRENT PROTECTIVE DEVICE COORDINATION STUDY. LABELS ARE INSTALLED IN THE FIELD BY THE CONTRACTOR.
8. THE ELECTRICAL CONTRACTOR SHALL PROVIDE A LAMINATE LABEL ON PANEL CTM INDICATING THE MAXIMUM AVAILABLE FAULT CURRENT AT THE PANEL. THE ELECTRICAL CONTRACTOR SHALL PROVIDE ALL REQUIRED CALCULATIONS BASED ON THE EXACT UTILITY TRANSFORMER USED ON THE PROJECT. THE LABEL SHALL INCLUDE THE DATE THE CALCULATIONS WHERE COMPLETED , THE MAXIMUM AVAILABLE FAULT CURRENT AND OTHER INFORMATION AS REQUIRED BY NEC 110.24. THE CALCULATION SHALL BE DOCUMENTED AND MADE AVAILABLE TO THOSE AUTHORIZED TO DESIGN, INSTALL, INSPECT, MAINTAIN OR OPERATE THE SYSTEM.

GENERAL NOTES:

9. CONTRACTOR SHALL TEST THE GROUND FAULT FUNCTION OF THE MAIN BUILDING DISCONNECT AND SET TO CORRECT SETTING. ALL TEST RESULTS SHALL BE SUBMITTED TO THE AHJ AND OWNER PRIOR TO POWER TO PANEL INSPECTION AND OR METER RELEASE.
10. ALL SYSTEM BONDING JUMPER CONDUCTORS SHOWN ARE TO BE RUN IN EACH PARALLEL FEEDER SET.
11. CONTRACTOR SHALL REVIEW ONE-LINE DIAGRAM AND CONFIRM FEEDER WIRE SIZES. ANY DISCREPANCIES SHALL BE REPORTED TO THE ENGINEER PRIOR TO BID. IF DISCREPANCIES EXIST, CONTRACTOR SHALL PROVIDE CORRECT WIRE SIZE BASED ON ACTUAL BREAKER SIZE AND ANY VOLTAGE DROP ADJUSTMENTS. SEE NEC 210.19, 215.2, 250.112, AND 310.15.
12. ALL GROUNDING WIRES SHOWN IN FEEDER SCHEDULE ARE COPPER WIRES.

FFKR ARCHITECTS
730 Pacific Avenue • Salt Lake City, Utah 84104
O 801.521.6186 • FFKR.COM

ENVISION ENGINEERING
240 E MORRIS AVE, SUITE 200
SALT LAKE CITY, UT 84115
P (801) 534-1130
F (801) 534-1080
www.envisioneng.com

POLK ELEMENTARY RENOVATION
2615 POLK AVE, OGDEN, UTAH 84401
OGDEN SCHOOL DISTRICT
CONSTRUCTION DOCUMENTS - FEBURARY 28, 2020

PROJECT NUMBER 19030

ONE-LINE DIAGRAM - GENERATOR POWER

EP702

PANELBOARD SCHEDULE

PANEL NAME: 2HB2B — MOUNTING: SURFACE; ENCLOSURE: NEMA 1; DOOR STYLE: DOOR-IN-DOOR
VOLTAGE: 480Y/277; PHASE: 3; WIRE: 4; MIN. A.I.C. RATING: 65KA
MAINS TYPE: MLO; BUS MATERIAL: ALUMINUM; BUS RATING: 225 AMPS; MCB RATING: NONE
SPD: NONE; NEUTRAL: 100% RATED; BRANCH OCP TYPE: BOLT-ON CBs; ISOLATED GROUND: NO

NOTE	CIRCUIT DESCRIPTION	BREAKER AMPS	BREAKER POLE	LOAD TYPE	CKT. #	A	A	B	B	C	C	CKT. #	LOAD TYPE	BREAKER AMPS	BREAKER POLE	CIRCUIT DESCRIPTION	NOTE
	AIR HANDLER AH-1	110	3	M	1	28,254	581					2	M	15	3	EXHAUST FAN EF-2B-3	
	-	-	-	M	3			28,254	581			4	M	-	-	-	
	-	-	-	M	5					28,254	581	6	M	-	-	-	
	AIR HANDLER AH-2	40	3	M	7	10,526	581					8	M	15	3	EXHAUST FAN EF-2B-4	
	-	-	-	M	9			10,526	581			10	M	-	-	-	
	-	-	-	M	11					10,526	581	12	M	-	-	-	
	EXHAUST FAN EF-2B-1	15	3	M	13	581	1,330					14	M	15	3	MAKE-UP AIR UNIT MAU-2B-1	
	-	-	-	M	15			581	1,330			16	M	-	-	-	
	-	-	-	M	17					581	1,330	18	M	-	-	-	
	SPARE	20	1		19							20		-	-	SHUNT-TRIP	
	SPARE	20	1		21							22		20	1	SPARE	
	SPARE	20	1		23							24		20	1	SPARE	
	SPACE				25							26				SPACE	
	SPACE				27							28				SPACE	
	SPACE				29							30				SPACE	
	TOTAL CONNECTED LOAD PER PHASE (VA):					41,853		41,853		41,853							
	TOTAL ESTIMATED DEMAND LOAD PER PHASE (VA):					48,917		48,917		48,917							
	TOTAL ESTIMATED DEMAND LOAD PER PHASE (AMPS):					177		177		177							

TYPE	LOAD CLASSIFICATION	CONNECTED LOAD	DEMAND FACTOR	ESTIMATED DEMAND
P	SUB-PANEL	SUB-PANEL LOADS BROKEN OUT BY LOAD CLASSIFICATION BELOW		
R	RECEPTACLES	-	-	-
L	LIGHTING	-	-	-
C	CONTINUOUS	-	-	-
E	EQUIPMENT	-	-	-
M	MOTOR	125,559 VA	100%	125,559 VA
K	KITCHEN	-	-	-
	OTHER	-	-	-

PANEL TOTALS
TOTAL CONNECTED LOAD: 125,559 VA
25% OF LARGEST MOTOR: 21,191 VA
TOTAL ESTIMATED DEMAND LOAD: 146,750 VA
TOTAL ESTIMATED DEMAND BALANCED CURRENT: 177 AMPS
MAXIMUM ESTIMATED DEMAND PHASE CURRENT: 177 AMPS

PANELBOARD SCHEDULE

PANEL NAME: 1HB1A — MOUNTING: SURFACE; ENCLOSURE: NEMA 1; DOOR STYLE: DOOR-IN-DOOR
VOLTAGE: 480Y/277; PHASE: 3; WIRE: 4; MIN. A.I.C. RATING: 65KA
MAINS TYPE: MLO; BUS MATERIAL: ALUMINUM; BUS RATING: 150 AMPS; MCB RATING: NONE
SPD: NONE; NEUTRAL: 100% RATED; BRANCH OCP TYPE: BOLT-ON CBs; ISOLATED GROUND: NO

NOTE	CIRCUIT DESCRIPTION	BREAKER AMPS	BREAKER POLE	LOAD TYPE	CKT. #	A	A	B	B	C	C	CKT. #	LOAD TYPE	BREAKER AMPS	BREAKER POLE	CIRCUIT DESCRIPTION	NOTE
	PUMP P-1B-1	15	3	M	1	2,216	1,385					2	M	15	3	COOLING TOWER CT-1B-1	
	-	-	-	M	3			2,216	1,385			4	M	-	-	-	
	-	-	-	M	5					2,216	1,385	6	M	-	-	-	
	PUMP P-1B-2	15	3	M	7	2,216						8		20	1	SPARE	
	-	-	-	M	9			2,216				10		20	1	SPARE	
	-	-	-	M	11					2,216		12		20	1	SPARE	
	SPARE	20	1		13							14		20	1	SPARE	
	SPARE	20	1		15							16				SPACE	
	SPARE	20	1		17							18				SPACE	
	SPARE	20	1		19							20				SPACE	
	SPACE				21							22				SPACE	
	SPACE				23							24				SPACE	
	SPACE				25							26				SPACE	
	SPACE				27							28				SPACE	
	SPACE				29							30				SPACE	
	TOTAL CONNECTED LOAD PER PHASE (VA):					5,817		5,817		5,817							
	TOTAL ESTIMATED DEMAND LOAD PER PHASE (VA):					6,371		6,371		6,371							
	TOTAL ESTIMATED DEMAND LOAD PER PHASE (AMPS):					23		23		23							

TYPE	LOAD CLASSIFICATION	CONNECTED LOAD	DEMAND FACTOR	ESTIMATED DEMAND
P	SUB-PANEL	SUB-PANEL LOADS BROKEN OUT BY LOAD CLASSIFICATION BELOW		
R	RECEPTACLES	-	-	-
L	LIGHTING	-	-	-
C	CONTINUOUS	-	-	-
E	EQUIPMENT	-	-	-
M	MOTOR	17,451 VA	100%	17,451 VA
K	KITCHEN	-	-	-
	OTHER	-	-	-

PANEL TOTALS
TOTAL CONNECTED LOAD: 17,451 VA
25% OF LARGEST MOTOR: 1,662 VA
TOTAL ESTIMATED DEMAND LOAD: 19,113 VA
TOTAL ESTIMATED DEMAND BALANCED CURRENT: 23 AMPS
MAXIMUM ESTIMATED DEMAND PHASE CURRENT: 23 AMPS

DISTRIBUTION BOARD LOAD SUMMARY

BOARD NAME: MDP — VOLTAGE: 480Y/277; PHASE: 3; WIRES: 4
BUS RATING: 1600 AMPS; MAINS TYPE: MLO; MCB RATING: NONE

LOAD #	LOAD DESCRIPTION	LOAD TYPE	A (KVA)	B (KVA)	C (KVA)	KEYED NOTE
1	PANEL 1HB1A	P	5.8	5.8	5.8	
2	PANEL 2HB2B	P	41.9	41.9	41.9	
3	PANEL DPH-0A	P	100.9	97.7	92.3	
4	PANEL DPH-0B2	P	23.4	20.6	17.6	
5	PANEL DPH-0B3	P	32.3	26.8	23.4	
6	TRANSFORMER T-1B1	P	29.2	34.6	32.1	
7	PANEL 1EHB2	P	8.1	5.6	5.9	
8	PANEL DP-SH	P	23.2	18.5	17.0	
9	ELEVATOR ELE-1B	M	3.6	3.6	3.6	
10–20						
	TOTAL CONNECTED LOAD PER PHASE (KVA):		268.4	255.1	239.5	
	TOTAL ESTIMATED DEMAND LOAD PER PHASE (KVA):		339.3	329.3	318.2	
	TOTAL ESTIMATED DEMAND LOAD PER PHASE (AMPS):		1,225	1,189	1,149	

TYPE	LOAD CLASSIFICATION	CONNECTED LOAD	DEMAND FACTOR	ESTIMATED DEMAND
P	PANELBOARD	PANELBOARD LOADS BROKEN OUT PER TYPE BELOW		
R	RECEPTACLE	178.6 KVA	53%	94.3 KVA
L	LIGHTING*	306.3 KVA	125%	382.9 KVA
C	CONTINUOUS	-	-	-
E	EQUIPMENT	68.2 KVA	100%	68.2 KVA
M	MOTOR	387.8 KVA	100%	387.8 KVA
K	KITCHEN	77.0 KVA	65%	50.0 KVA
O	OTHER	3.7 KVA	100%	3.7 KVA

DISTRIBUTION BOARD TOTALS
TOTAL CONNECTED LOAD: 762.9 KVA
25% OF LARGEST MOTOR: 21.2 KVA
TOTAL ESTIMATED DEMAND LOAD: 1,008.1 KVA
TOTAL ESTIMATED DEMAND BALANCED CURRENT: 1,213 AMPS
MAXIMUM ESTIMATED DEMAND PHASE CURRENT: 1,225 AMPS

NOTES:
* THE LARGER OF THE ACTUAL CONNECTED LIGHTING LOAD AND THE MINIMUM GENERAL LIGHTING LOAD BY OCCUPANCY PER NEC TABLE 220.12

DISTRIBUTION BOARD LOAD SUMMARY

BOARD NAME: CTM — VOLTAGE: 480Y/277; PHASE: 3; WIRES: 4
BUS RATING: 2500 AMPS; MAINS TYPE: MLO; MCB RATING: NONE

LOAD #	LOAD DESCRIPTION	LOAD TYPE	A (KVA)	B (KVA)	C (KVA)	KEYED NOTE
1	PANEL MDP	P	268.4	255.1	239.5	
2	PANEL DP-PV	P	110.8	110.8	110.8	
3–10						
	TOTAL CONNECTED LOAD PER PHASE (KVA):		379.2	365.9	350.3	
	TOTAL ESTIMATED DEMAND LOAD PER PHASE (KVA):		339.3	329.3	318.2	
	TOTAL ESTIMATED DEMAND LOAD PER PHASE (AMPS):		1,225	1,189	1,149	

TYPE	LOAD CLASSIFICATION	CONNECTED LOAD	DEMAND FACTOR	ESTIMATED DEMAND
P	PANELBOARD	PANELBOARD LOADS BROKEN OUT PER TYPE BELOW		
R	RECEPTACLE	178.6 KVA	53%	94.3 KVA
L	LIGHTING*	306.3 KVA	125%	382.9 KVA
C	CONTINUOUS	-	-	-
E	EQUIPMENT	68.2 KVA	100%	68.2 KVA
M	MOTOR	387.8 KVA	100%	387.8 KVA
K	KITCHEN	77.0 KVA	65%	50.0 KVA
O	OTHER	3.7 KVA	100%	3.7 KVA

DISTRIBUTION BOARD TOTALS
TOTAL CONNECTED LOAD: 1,095.3 KVA
25% OF LARGEST MOTOR: 21.2 KVA
TOTAL ESTIMATED DEMAND LOAD: 1,008.1 KVA
TOTAL ESTIMATED DEMAND BALANCED CURRENT: 1,213 AMPS
MAXIMUM ESTIMATED DEMAND PHASE CURRENT: 1,225 AMPS

NOTES:
* THE LARGER OF THE ACTUAL CONNECTED LIGHTING LOAD AND THE MINIMUM GENERAL LIGHTING LOAD BY OCCUPANCY PER NEC TABLE 220.12

DISTRIBUTION BOARD LOAD SUMMARY

BOARD NAME: DPH0A — VOLTAGE: 480Y/277; PHASE: 3; WIRES: 4
BUS RATING: 800 AMPS; MAINS TYPE: MLO; MCB RATING: NONE

LOAD #	LOAD DESCRIPTION	LOAD TYPE	A (KVA)	B (KVA)	C (KVA)	KEYED NOTE
1	PANEL 0HAA	P	39.8	39.8	39.8	
2	PANEL 1HAA	P	3.8	2.9	2.8	
3	TRANSFORMER T-0A	P	53.7	51.3	46.1	
4	ELEVATOR ELEV-1A	M	3.6	3.6	3.6	
5–10						
	TOTAL CONNECTED LOAD PER PHASE (KVA):		100.9	97.7	92.3	
	TOTAL ESTIMATED DEMAND LOAD PER PHASE (KVA):		93.0	87.9	84.4	
	TOTAL ESTIMATED DEMAND LOAD PER PHASE (AMPS):		336	317	305	

TYPE	LOAD CLASSIFICATION	CONNECTED LOAD	DEMAND FACTOR	ESTIMATED DEMAND
P	PANELBOARD	PANELBOARD LOADS BROKEN OUT PER TYPE BELOW		
R	RECEPTACLE	66.0 KVA	58%	38.0 KVA
L	LIGHTING*	9.7 KVA	125%	12.1 KVA
C	CONTINUOUS	-	-	-
E	EQUIPMENT	32.5 KVA	100%	32.5 KVA
M	MOTOR	180.1 KVA	100%	180.1 KVA
K	KITCHEN	-	-	-
O	OTHER	2.5 KVA	100%	2.5 KVA

DISTRIBUTION BOARD TOTALS
TOTAL CONNECTED LOAD: 290.9 KVA
25% OF LARGEST MOTOR: 18.5 KVA
TOTAL ESTIMATED DEMAND LOAD: 283.8 KVA
TOTAL ESTIMATED DEMAND BALANCED CURRENT: 341 AMPS
MAXIMUM ESTIMATED DEMAND PHASE CURRENT: 336 AMPS

NOTES:
* THE LARGER OF THE ACTUAL CONNECTED LIGHTING LOAD AND THE MINIMUM GENERAL LIGHTING LOAD BY OCCUPANCY PER NEC TABLE 220.12

PANELBOARD SCHEDULE

PANEL NAME: 1LB1 — MOUNTING: SURFACE; ENCLOSURE: NEMA 1; DOOR STYLE: DOOR-IN-DOOR
VOLTAGE: 208Y/120; PHASE: 3; WIRE: 4; MIN. A.I.C. RATING: 22KA
MAINS TYPE: MLO; BUS MATERIAL: ALUMINUM; BUS RATING: 150 AMPS; MCB RATING: NONE
SPD: CATEGORY "A"; NEUTRAL: 100% RATED; BRANCH OCP TYPE: BOLT-ON CBs; ISOLATED GROUND: NO

NOTE	CIRCUIT DESCRIPTION	BREAKER AMPS	BREAKER POLE	LOAD TYPE	CKT. #	A	A	B	B	C	C	CKT. #	LOAD TYPE	BREAKER AMPS	BREAKER POLE	CIRCUIT DESCRIPTION	NOTE
	REST RM / CUSTODIAL C.O.	20	1	R	1	720	540					2	R	20	1	EXTERIOR C.O.	
	OFFICE A162A C.O.	20	1	R	3			720	540			4	R	20	1	EXTERIOR C.O.	
	RECEIVING C.O.	20	1	R	5					900	180	6	R	20	1	OUTDOOR STORAGE C.O.	
	RECEIVING C.O.	20	1	R	7	360	180					8	R	20	1	OUTDOOR STORAGE C.O.	
	RECEIVING C.O.	20	1	R	9			360	180			10	R	20	1	OUTDOOR STORAGE C.O.	
	RECEIVING C.O.	20	1	R	11					360	864	12	M	20	1	INLINE FAN IF-1B-1	
1	RECEIVING WASHER	20	1	M	13	1,200	150					14	M	20	1	UNIT HEATER UH-1B-1, 1B-2, 1B-3	
	RECEIVING DRYER	30	2	M	15			2,496	1,200			16	E	20	1	COOLING TOWER FILTER CTF-1B-1	
	-	-	-	M	17					2,496	1,200	18	E	20	1	WATER TREATMENT SYSTEM WTS-1B-1	
	HVAC CONTROLS	20	1	M	19	600						20		20	1	SPARE	
	RECEIVING OHD	20	1	M	21			1,920				22		20	1	SPARE	
	RECEIVING DOOR BELL	20	1	E	23					600		24		20	1	SPARE	
	SPARE	20	1		25							26		20	1	SPARE	
	SPARE	20	1		27							28		20	1	SPARE	
	SPARE	20	1		29							30		20	1	SPARE	
	TOTAL CONNECTED LOAD PER PHASE (VA):					3,750		7,416		6,600							
	TOTAL ESTIMATED DEMAND LOAD PER PHASE (VA):					3,750		8,040		7,224							
	TOTAL ESTIMATED DEMAND LOAD PER PHASE (AMPS):					31		67		60							

TYPE	LOAD CLASSIFICATION	CONNECTED LOAD	DEMAND FACTOR	ESTIMATED DEMAND
P	SUB-PANEL	SUB-PANEL LOADS BROKEN OUT BY LOAD CLASSIFICATION BELOW		
R	RECEPTACLES	5,040 VA	100%	5,040 VA
L	LIGHTING	-	-	-
C	CONTINUOUS	-	-	-
E	EQUIPMENT	3,600 VA	100%	3,600 VA
M	MOTOR	9,126 VA	100%	9,126 VA
K	KITCHEN	-	-	-
	OTHER	-	-	-

PANEL TOTALS
TOTAL CONNECTED LOAD: 17,766 VA
25% OF LARGEST MOTOR: 1,248 VA
TOTAL ESTIMATED DEMAND LOAD: 19,014 VA
TOTAL ESTIMATED DEMAND BALANCED CURRENT: 53 AMPS
MAXIMUM ESTIMATED DEMAND PHASE CURRENT: 67 AMPS

PANELBOARD SCHEDULE

PANEL NAME: K1 — MOUNTING: RECESSED; ENCLOSURE: STAINLESS STEEL; DOOR STYLE: DOOR-IN-DOOR
VOLTAGE: 208Y/120; PHASE: 3; WIRE: 4; MIN. A.I.C. RATING: 22KA
MAINS TYPE: MLO; BUS MATERIAL: ALUMINUM; BUS RATING: 225 AMPS; MCB RATING: NONE
SPD: NONE; NEUTRAL: 100% RATED; BRANCH OCP TYPE: BOLT-ON CBs; ISOLATED GROUND: NO

NOTE	CIRCUIT DESCRIPTION	BREAKER AMPS	BREAKER POLE	LOAD TYPE	CKT. #	A	A	B	B	C	C	CKT. #	LOAD TYPE	BREAKER AMPS	BREAKER POLE	CIRCUIT DESCRIPTION	NOTE
1,6	BOOSTER HEATER E-13	20	1	K	1	360	828					2	K	15	3	DISPOSER E-11	1,6
1,6	ICE MAKER E-22	20	1	K	3			1,704	828			4	K	-	-	-	-
	COUNTER C.O. E-16	20	1	K	5					1,200	828	6	K	-	-	-	-
	COUNTER C.O. E-17	20	1	K	7	1,200	1,284					8	K	20	3	DISHEASHER E-12	1,6
	WORK TABEL C.O. E-25	20	1	K	9			1,200	1,284			10	K	-	-	-	-
1	EXHAUST HOOD E-28	20	1	K	11					900	1,284	12	K	-	-	-	-
1	EXHAUST HOOD HEAT SENSOR E-30	20	1	K	13	1,800	828					14	K	15	3	DISPOSER E-21	1,6
1	MIXER E-27	20	1	K	15			1,200	828			16	K	-	-	-	-
	COUNTER C.O. E-26	20	1	K	17					1,200	828	18	K	-	-	-	-
	COUNTER C.O. E-25	20	1	K	19	1,200	6,000					20	K	70	3	UTILITY DISTRIBUTION SYSTEM E-31	6
	COUNTER C.O. E-24	20	1	K	21			1,200	6,000			22	K	-	-	-	-
	GAS VALVE E-29	20	1	K	23					120	6,000	24	K	-	-	-	-
	FOOD PROCESSOR E-18	20	1	K	25	960						26		-	-	SHUNT-TRIP	-
	COUNTER C.O. E-38	20	1	K	27			1,200	750			28	K	20	2	HOT FOOD CABINET E-32	6
	COUNTER C.O. E-19	20	1	K	29					1,200	750	30	K	-	-	-	-
	SLICER E-20	20	1	K	31	720	750					32	K	20	2	HOT FOOD CABINET E-37	1,6
1	REACH-IN REFRIG E-33	20	1	K	33			456	750			34	K	-	-	-	-
	MICROWAVE E-34	25	1	K	35					2,040	2,465	36	K	35	2	FOOD WELLS E-39	1,6
1	REACH-IN REFRIG E-36	20	1	K	37	456	2,465					38	K	-	-	-	-
	MICROWAVE E-35	25	1	K	39			2,040	2,465			40	K	35	2	FOOD WELLS E-40	1,6
	MILK COOLER E-41,E-43	20	1	K	41					900	2,465	42	K	-	-	-	-
	MILK COOLER E-42,E-44	20	1	K	43	900	1,664					44	M	20	2	SERVING OHD	
	POS E-45	20	1	K	45			1,200	1,664			46	M	-	-	-	
	KITCHEN C.O.	20	1	R	47					720	1,976	48	M	25	2	SPLIT SYSTEM AC-1B-1.1, 1.2	
	KITCHEN C.O.	20	1	R	49	720	1,976					50	M	-	-	-	
	KITCHEN C.O.	20	1	R	51			900	1,200			52	M	20	1	EXHAUST FAN EF-2B-5	
	KITCHEN C.O.	20	1	R	53							54		20	1	SPARE	
	OFFICE C.O.	20	1	R	55	720						56		20	1	SPARE	
	ROOF C.O.	20	1	R	57			360				58		20	1	SPARE	
	SERVING TV'S	20	1	E	59					600		60		20	1	SPARE	
	KITCHEN HVAC CONTROLS	20	1	E	61	600						62		20	1	SPARE	
	SPARE	20	1		63							64		20	1	SPARE	
	SPARE	20	1		65							66		20	1	SPARE	
	SPARE	20	1		67							68		20	1	SPARE	
	SPARE	20	1		69							70		20	1	SPARE	
	SPARE	20	1		71							72		20	1	SPARE	
	TOTAL CONNECTED LOAD PER PHASE (VA):					25,431		27,229		25,476							
	TOTAL ESTIMATED DEMAND LOAD PER PHASE (VA):					19,012		19,142		18,207							
	TOTAL ESTIMATED DEMAND LOAD PER PHASE (AMPS):					158		160		152							

TYPE	LOAD CLASSIFICATION	CONNECTED LOAD	DEMAND FACTOR	ESTIMATED DEMAND
P	SUB-PANEL	SUB-PANEL LOADS BROKEN OUT BY LOAD CLASSIFICATION BELOW		
R	RECEPTACLES	3,420 VA	100%	3,420 VA
L	LIGHTING	-	-	-
C	CONTINUOUS	-	-	-
E	EQUIPMENT	1,200 VA	100%	1,200 VA
M	MOTOR	8,480 VA	100%	8,480 VA
K	KITCHEN	65,036 VA	65%	42,273 VA
	OTHER	-	-	-

PANEL TOTALS
TOTAL CONNECTED LOAD: 78,136 VA
25% OF LARGEST MOTOR: 988 VA
TOTAL ESTIMATED DEMAND LOAD: 56,361 VA
TOTAL ESTIMATED DEMAND BALANCED CURRENT: 156 AMPS
MAXIMUM ESTIMATED DEMAND PHASE CURRENT: 160 AMPS

DISTRIBUTION BOARD LOAD SUMMARY

BOARD NAME: DPL1B1 — VOLTAGE: 208Y/120; PHASE: 3; WIRES: 4
BUS RATING: 400 AMPS; MAINS TYPE: MCB; MCB RATING: 400 AMPS

LOAD #	LOAD DESCRIPTION	LOAD TYPE	A (KVA)	B (KVA)	C (KVA)	KEYED NOTE
1	PANEL K1	P	25.4	27.2	25.5	
2	PANEL 1LB1	P	3.8	7.4	6.6	
3–10						
	TOTAL CONNECTED LOAD PER PHASE (KVA):		29.2	34.6	32.1	
	TOTAL ESTIMATED DEMAND LOAD PER PHASE (KVA):		22.3	25.6	24.3	
	TOTAL ESTIMATED DEMAND LOAD PER PHASE (AMPS):		186	221	203	

TYPE	LOAD CLASSIFICATION	CONNECTED LOAD	DEMAND FACTOR	ESTIMATED DEMAND
P	PANELBOARD	PANELBOARD LOADS BROKEN OUT PER TYPE BELOW		
R	RECEPTACLE	8.5 KVA	100%	8.5 KVA
L	LIGHTING*	-	-	-
C	CONTINUOUS	-	-	-
E	EQUIPMENT	4.8 KVA	100%	4.8 KVA
M	MOTOR	17.6 KVA	100%	17.6 KVA
K	KITCHEN	65.0 KVA	65%	42.3 KVA
O	OTHER	-	-	-

DISTRIBUTION BOARD TOTALS
TOTAL CONNECTED LOAD: 95.9 KVA
25% OF LARGEST MOTOR: 1.2 KVA
TOTAL ESTIMATED DEMAND LOAD: 74.4 KVA
TOTAL ESTIMATED DEMAND BALANCED CURRENT: 206 AMPS
MAXIMUM ESTIMATED DEMAND PHASE CURRENT: 221 AMPS

NOTES:
* THE LARGER OF THE ACTUAL CONNECTED LIGHTING LOAD AND THE MINIMUM GENERAL LIGHTING LOAD BY OCCUPANCY PER NEC TABLE 220.12

PANELBOARD SCHEDULE GENERAL NOTES:

1. FOR MULTI-PHASE BRANCH CIRCUITS WHERE NEUTRAL CONDUCTORS ARE SHARED, PROVIDE BREAKERS AS FOLLOWS:

   120/208V, 3-PHASE SYSTEMS - PROVIDE UL-LISTED COMMON HANDLES ON CIRCUIT BREAKERS FOR CIRCUITS THAT SHARE A NEUTRAL WHETHER SHOWN OR NOT.

   277/480V, 3-PHASE SYSTEMS - PROVIDE 480V, MULTI-POLE BREAKERS FOR 277/ CIRCUITS THAT SHARE A NEUTRAL WHETHER SHOWN OR NOT. PLEASE NOTE THAT FOR 277/ BRANCH CIRCUITS ONLY, A DEDICATED NEUTRAL MAY BE PROVIDED FOR EACH CIRCUIT IN CONJUNCTION WITH 20A-1P BREAKERS IN LIEU OF SHARED NEUTRALS WITH MULTI-POLE BREAKERS.

2. CONTRACTOR SHALL UPSIZE ALL BRANCH CIRCUITS AS NECESSARY FOR VOLTAGE DROP WHETHER SHOWN OR NOT.

PANELBOARD SCHEDULE NOTES:

1. CONTRACTOR SHALL USE THE ROOM NAMES LISTED ON THE ARCHITECTURAL SIGNAGE PLAN FOR ALL ROOM NAMES ON THE FINAL PANEL SCHEDULE CIRCUIT DESCRIPTIONS. IF IT IS FOUND THAT THE ARCHITECTURAL FLOOR PLAN ROOM NAMES HAVE BEEN USED THE SCHEDULES WILL BE UPDATED TO FOR THE CORRECT ROOM NAMES AT NO ADDITIONAL COST TO THE OWNER.

PANELBOARD SCHEDULE KEYED NOTES:
1. PROVIDE CLASS A GROUND FAULT INTERRUPTER TYPE CIRCUIT BREAKER.
2. PROVIDE ARC FAULT CIRCUIT INTERRUPTER TYPE CIRCUIT BREAKER.
3. PROVIDE 30 MILLIAMPERE EQUIPMENT GROUND FAULT PROTECTOR TYPE CIRCUIT BREAKER.
4. PROVIDE SHUNT-TRIP TYPE CIRCUIT BREAKER WITH 120V COIL.
5. PROVIDE HACR RATED CIRCUIT BREAKER.
6. PROVIDE HANDLE CLAMP FOR HOLDING CIRCUIT BREAKER IN THE "ON" OR "OFF" POSITION.
7. PROVIDE SWITCHING RATED CIRCUIT BREAKER.
8. PROVIDE NEW CIRCUIT BREAKER IN EXISTING PANELBOARD (WHERE PANEL IS INDICATED AS EXISTING) OF SAME MANUFACTURER AND A.I.C. RATING AS EXISTING.
9. EXISTING LOAD.

DISTRIBUTION BOARD LOAD SUMMARY

BOARD NAME: DPL0A — VOLTAGE: 208Y/120; PHASE: 3; WIRES: 4
BUS RATING: 600 AMPS; MAINS TYPE: MCB; MCB RATING: 600 AMPS

LOAD #	LOAD DESCRIPTION	LOAD TYPE	A (KVA)	B (KVA)	C (KVA)	KEYED NOTE
1	PANEL 0LAA	P	6.8	7.4	5.0	
2	PANEL 0LAB	P	9.2	7.1	7.0	
3	PANEL 1LAA	P	19.6	21.3	18.8	
4	PANEL 1LAB	P	4.8	4.2	3.1	
5	PANEL 2LAA	P	4.9	5.4	5.4	
6	PANEL 2LAB	P	8.3	5.8	6.7	
7–10						
	TOTAL CONNECTED LOAD PER PHASE (KVA):		53.7	51.3	46.1	
	TOTAL ESTIMATED DEMAND LOAD PER PHASE (KVA):		44.8	40.9	37.5	
	TOTAL ESTIMATED DEMAND LOAD PER PHASE (AMPS):		373	340	312	

TYPE	LOAD CLASSIFICATION	CONNECTED LOAD	DEMAND FACTOR	ESTIMATED DEMAND
P	PANELBOARD	PANELBOARD LOADS BROKEN OUT PER TYPE BELOW		
R	RECEPTACLE	66.0 KVA	58%	38.0 KVA
L	LIGHTING*	.2 KVA	125%	.2 KVA
C	CONTINUOUS	-	-	-
E	EQUIPMENT	32.5 KVA	100%	32.5 KVA
M	MOTOR	49.8 KVA	100%	49.8 KVA
K	KITCHEN	-	-	-
O	OTHER	2.5 KVA	100%	2.5 KVA

DISTRIBUTION BOARD TOTALS
TOTAL CONNECTED LOAD: 151.0 KVA
25% OF LARGEST MOTOR: .7 KVA
TOTAL ESTIMATED DEMAND LOAD: 123.8 KVA
TOTAL ESTIMATED DEMAND BALANCED CURRENT: 344 AMPS
MAXIMUM ESTIMATED DEMAND PHASE CURRENT: 373 AMPS

NOTES:
* THE LARGER OF THE ACTUAL CONNECTED LIGHTING LOAD AND THE MINIMUM GENERAL LIGHTING LOAD BY OCCUPANCY PER NEC TABLE 220.12

PANELBOARD SCHEDULE

PANEL NAME: 1HAA — MOUNTING: SURFACE; ENCLOSURE: NEMA 1; DOOR STYLE: DOOR-IN-DOOR
VOLTAGE: 480Y/277; PHASE: 3; WIRE: 4; MIN. A.I.C. RATING: 65KA
MAINS TYPE: MLO; BUS MATERIAL: ALUMINUM; BUS RATING: 225 AMPS; MCB RATING: NONE
SPD: CATEGORY "A"; NEUTRAL: 100% RATED; BRANCH OCP TYPE: BOLT-ON CBs; ISOLATED GROUND: NO

NOTE	CIRCUIT DESCRIPTION	BREAKER AMPS	BREAKER POLE	LOAD TYPE	CKT. #	A	A	B	B	C	C	CKT. #	LOAD TYPE	BREAKER AMPS	BREAKER POLE	CIRCUIT DESCRIPTION	NOTE
	LVL 0 CORRIDOR, CUST, STORAGE LTS	20	1	L	1	1,399	260					2	L	20	2	NORTH PARKING LOT LIGHTS	
	LVL 0 CLASSROOM LTS	20	1	L	3			1,444	260			4	L	-	-	-	
	ELEVATOR SHAFT LIGHTS	20	1	L	5					128		6		20	1	SPARE	
	LVL 1 CORRIDOR / ADMIN LTS	20	1	L	7	2,181						8		20	1	SPARE	
	LVL 1 CLASSROOMS / MEDIA CENTER	20	1	L	9			1,206				10		20	1	SPARE	
	LVL 2 CORRIDOR / CLASSRM LTS	20	1	L	11					2,644		12		20	1	SPARE	
	SPARE	20	1		13							14				SPACE	
	SPARE	20	1		15							16				SPACE	
	SPARE	20	1		17							18				SPACE	
	SPARE	20	1		19							20				SPACE	
	SPACE				21							22				SPACE	
	SPACE				23							24				SPACE	
	SPACE				25							26				SPACE	
	SPACE				27							28				SPACE	
	SPACE				29							30				SPACE	
	TOTAL CONNECTED LOAD PER PHASE (VA):					3,840		2,910		2,772							
	TOTAL ESTIMATED DEMAND LOAD PER PHASE (VA):					4,800		3,638		3,465							
	TOTAL ESTIMATED DEMAND LOAD PER PHASE (AMPS):					17		13		13							

TYPE	LOAD CLASSIFICATION	CONNECTED LOAD	DEMAND FACTOR	ESTIMATED DEMAND
P	SUB-PANEL	SUB-PANEL LOADS BROKEN OUT BY LOAD CLASSIFICATION BELOW		
R	RECEPTACLES	-	-	-
L	LIGHTING	9,522 VA	125%	11,903 VA
C	CONTINUOUS	-	-	-
E	EQUIPMENT	-	-	-
M	MOTOR	-	-	-
K	KITCHEN	-	-	-
	OTHER	-	-	-

PANEL TOTALS
TOTAL CONNECTED LOAD: 9,522 VA
25% OF LARGEST MOTOR: -
TOTAL ESTIMATED DEMAND LOAD: 11,903 VA
TOTAL ESTIMATED DEMAND BALANCED CURRENT: 14 AMPS
MAXIMUM ESTIMATED DEMAND PHASE CURRENT: 17 AMPS

PANELBOARD SCHEDULE

PANEL NAME: 0HAA — MOUNTING: SURFACE; ENCLOSURE: NEMA 1; DOOR STYLE: DOOR-IN-DOOR
VOLTAGE: 480Y/277; PHASE: 3; WIRE: 4; MIN. A.I.C. RATING: 65KA
MAINS TYPE: MLO; BUS MATERIAL: ALUMINUM; BUS RATING: 225 AMPS; MCB RATING: NONE
SPD: NONE; NEUTRAL: 100% RATED; BRANCH OCP TYPE: BOLT-ON CBs; ISOLATED GROUND: NO

NOTE	CIRCUIT DESCRIPTION	BREAKER AMPS	BREAKER POLE	LOAD TYPE	CKT. #	A	A	B	B	C	C	CKT. #	LOAD TYPE	BREAKER AMPS	BREAKER POLE	CIRCUIT DESCRIPTION	NOTE
	PUMP P-0A-1	40	3	M	1	5,817	24,653					2	M	110	3	CHILLER CH-0A-1	
	-	-	-	M	3			5,817	24,653			4	M	-	-	-	
	-	-	-	M	5					5,817	24,653	6	M	-	-	-	
	PUMP P-0A-2	40	3	M	7	5,817	831					8	M	15	3	PUMP P-0A-6	
	-	-	-	M	9			5,817	831			10	M	-	-	-	
	-	-	-	M	11					5,817	831	12	M	-	-	-	
	PUMP P-0A-3	15	3	M	13	942						14		20	1	SPARE	
	-	-	-	M	15			942				16		20	1	SPARE	
	-	-	-	M	17					941		18		20	1	SPARE	
	PUMP P-0A-4	15	3	M	19	942						20		20	1	SPARE	
	-	-	-	M	21			942				22		20	1	SPARE	
	-	-	-	M	23					942		24				SPACE	
	PUMP P-0A-5	15	3	M	25	831						26				SPACE	
	-	-	-	M	27			831				28				SPACE	
	-	-	-	M	29					831		30				SPACE	
	TOTAL CONNECTED LOAD PER PHASE (VA):					39,833		39,833		39,832							
	TOTAL ESTIMATED DEMAND LOAD PER PHASE (VA):					45,996		45,996		45,995							
	TOTAL ESTIMATED DEMAND LOAD PER PHASE (AMPS):					166		166		166							

TYPE	LOAD CLASSIFICATION	CONNECTED LOAD	DEMAND FACTOR	ESTIMATED DEMAND
P	SUB-PANEL	SUB-PANEL LOADS BROKEN OUT BY LOAD CLASSIFICATION BELOW		
R	RECEPTACLES	-	-	-
L	LIGHTING	-	-	-
C	CONTINUOUS	-	-	-
E	EQUIPMENT	-	-	-
M	MOTOR	119,498 VA	100%	119,498 VA
K	KITCHEN	-	-	-
	OTHER	-	-	-

PANEL TOTALS
TOTAL CONNECTED LOAD: 119,498 VA
25% OF LARGEST MOTOR: 18,490 VA
TOTAL ESTIMATED DEMAND LOAD: 137,988 VA
TOTAL ESTIMATED DEMAND BALANCED CURRENT: 166 AMPS
MAXIMUM ESTIMATED DEMAND PHASE CURRENT: 166 AMPS

PANELBOARD SCHEDULE

PANEL NAME: 1LAA — MOUNTING: SURFACE; ENCLOSURE: NEMA 1; DOOR STYLE: DOOR-IN-DOOR
VOLTAGE: 208Y/120; PHASE: 3; WIRE: 4; MIN. A.I.C. RATING: 22KA
MAINS TYPE: MLO; BUS MATERIAL: ALUMINUM; BUS RATING: 225 AMPS; MCB RATING: NONE
SPD: CATEGORY "A"; NEUTRAL: 200% RATED; BRANCH OCP TYPE: BOLT-ON CBs; ISOLATED GROUND: NO

NOTE	CIRCUIT DESCRIPTION	BREAKER AMPS	BREAKER POLE	LOAD TYPE	CKT. #	A	A	B	B	C	C	CKT. #	LOAD TYPE	BREAKER AMPS	BREAKER POLE	CIRCUIT DESCRIPTION	NOTE
	RECEPTION PNDANT LIGHTS	20	1	L	1	180	4,160					2	E	50	2	FACULTY RM RANGE	
	CORRIDOR C.O.	20	1	R	3			1,080	4,160			4	E	-	-	-	
	CORRIDOR C.O.	20	1	R	5					900	1,000	6	E	20	1	FACULTY RM REFRIG	1
1	DRINKING FOUNTAIN	20	1	E	7	600	1,500					8	E	20	1	FACULTY RM MICROWAVE	
	DISPLAY CASE	20	1	R	9			1,200	1,500			10	E	20	1	FACULTY RM MICROWAVE	
	DISPLAY CASE	20	1	R	11					1,200	1,200	12	R	20	1	FACULTY RM COUNTER C.O.	
	ADMIN CORRIDOR C.O.	20	1	R	13	900	1,200					14	R	20	1	FACULTY RM COUNTER C.O.	
	WAITING C.O.	20	1	R	15			1,200	540			16	R	20	1	WORK RM A122 C.O.	
	MAIL C.O.	20	1	R	17					1,200	540	18	R	20	1	WORK RM A122 C.O.	
	COUNSELOR A105 C.O.	20	1	R	19	1,080	540					20	R	20	1	WORK RM A122 C.O.	
	ASS'T PRINCIPAL A106 C.O.	20	1	R	21			900	1,200			22	R	20	1	WORK RM A122 LAMINATOR	
	PRINCIPAL A108 C.O.	20	1	R	23					900	1,500	24	E	20	1	WORK RM A122 PRINTER	
	CONF A109 C.O.	20	1	R	25	540	1,500					26	E	20	1	WORK RM A122 PRINTER	
	CONF A109 C.O.	20	1	R	27			900	1,664			28	E	20	2	WORK RM A122 PRINTER	
	CONF A109 POKE-THRU	20	1	R	29					360	1,664	30	E	-	-	-	
	INSTRUCT COACH A113 C.O.	20	1	R	31	1,080	1,200					32	M	20	1	SPC NEEDS TABLE	
	SPEECH A114 C.O.	20	1	R	33			1,080	720			34	R	20	1	FUNCTIONAL SKILLS A120 C.O.	
	TECH SUPPORT A115 C.O.	20	1	R	35					360	540	36	R	20	1	FUNCTIONAL SKILLS A120 C.O.	
	TECH SUPPORT A115 C.O.	20	1	R	37	360	900					38	R	20	1	FUNCTIONAL SKILLS A120 C.O.	
	TECH SUPPORT A115 C.O.	20	1	R	39			360	180			40	R	20	1	FUNCTIONAL SKILLS A120 A/V C.O.	
	CUST / RESTRM C.O.	20	1	R	41					540	720	42	R	20	1	RESOURCE A117 C.O.	
	CONF A128 C.O.	20	1	R	43	720	900					44	R	20	1	RESOURCE A117 C.O.	
	MOTHERS A127A C.O.	20	1	R	45			720	180			46	R	20	1	RESOURCE A117 A/V C.O.	
1	MOTHERS A127A UC REFRIG	20	1	E	47					600	900	48	R	20	1	WORK ROOM A118A C.O.	
	FACULTY RM A127 C.O.	20	1	R	49	540	540					50	R	20	1	MEDIA CENTER A119 C.O.	
	FACULTY RM A127 C.O.	20	1	R	51			540	720			52	R	20	1	MEDIA CENTER A119 C.O.	
	FACULTY RM A127 DISPOSAL	25	1	M	53					1,680	540	54	R	20	1	STAIR / MECH C.O.	
	SPARE	20	1		55		1,200					56	E	20	1	FUNCTIONAL SKILLS WASHER	1
	SPARE	20	1		57				2,496			58	E	30	1	FUNCTIONAL SKILLS DRYER	
	SPARE	20	1		59						2,496	60		-	-	-	
	SPARE	20	1		61							62		20	1	SPARE	
	SPARE	20	1		63							64		20	1	SPARE	
	SPACE				65							66		20	1	SPARE	
	SPACE				67							68		20	1	SPARE	
	SPACE				69							70		20	1	SPARE	
	SPACE				71							72		20	1	SPARE	
	TOTAL CONNECTED LOAD PER PHASE (VA):					19,640		21,340		18,840							
	TOTAL ESTIMATED DEMAND LOAD PER PHASE (VA):					16,549		17,455		15,921							
	TOTAL ESTIMATED DEMAND LOAD PER PHASE (AMPS):					138		145		133							

TYPE	LOAD CLASSIFICATION	CONNECTED LOAD	DEMAND FACTOR	ESTIMATED DEMAND
P	SUB-PANEL	SUB-PANEL LOADS BROKEN OUT BY LOAD CLASSIFICATION BELOW		
R	RECEPTACLES	30,720 VA	66%	20,360 VA
L	LIGHTING	180 VA	125%	225 VA
C	CONTINUOUS	-	-	-
E	EQUIPMENT	23,544 VA	100%	23,544 VA
M	MOTOR	2,880 VA	100%	2,880 VA
K	KITCHEN	-	-	-
	OTHER	2,496 VA	100%	2,496 VA

PANEL TOTALS
TOTAL CONNECTED LOAD: 59,820 VA
25% OF LARGEST MOTOR: 420 VA
TOTAL ESTIMATED DEMAND LOAD: 49,925 VA
TOTAL ESTIMATED DEMAND BALANCED CURRENT: 139 AMPS
MAXIMUM ESTIMATED DEMAND PHASE CURRENT: 145 AMPS

PANELBOARD SCHEDULE

PANEL NAME: 0LAB — MOUNTING: SURFACE; ENCLOSURE: NEMA 1; DOOR STYLE: DOOR-IN-DOOR
VOLTAGE: 208Y/120; PHASE: 3; WIRE: 4; MIN. A.I.C. RATING: 22KA
MAINS TYPE: MLO; BUS MATERIAL: ALUMINUM; BUS RATING: 225 AMPS; MCB RATING: NONE
SPD: NONE; NEUTRAL: 100% RATED; BRANCH OCP TYPE: BOLT-ON CBs; ISOLATED GROUND: NO

NOTE	CIRCUIT DESCRIPTION	BREAKER AMPS	BREAKER POLE	LOAD TYPE	CKT. #	A	A	B	B	C	C	CKT. #	LOAD TYPE	BREAKER AMPS	BREAKER POLE	CIRCUIT DESCRIPTION	NOTE
	AIREDALE UNIT AD-0A-1	25	1	M	1	2,160	1,040					2	M	20	2	FAN COIL FC-0A-2	
	AIREDALE UNIT AD-0A-2	25	1	M	3			2,160	1,040			4	M	-	-	-	
	AIREDALE UNIT AD-0A-3	25	1	M	5					2,160	208	6	M	20	2	CEILING CASSEETTE CC-0A-1, 2,3	
	CABINET UNIT HEATER CUH-0A-1,2,3	20	1	M	7	1,080	208					8	M	-	-	-	
	CABINET UNIT HEATER CUH-0A-4	20	1	M	9			360	1,200			10	E	20	1	GLYCOL FEED UNIT GFU-0A-1	
	FAN COIL FC-0A-1	25	1	M	11					1,680	1,200	12	E	20	1	GLYCOL FEED UNIT GFU-0A-2	
	INLINE FAN IF-0A-1	20	1	M	13	1,200	1,200					14	M	20	1	ADA DOOR	
	UNIT HEATER UH-0A-1	20	1	M	15			25				16		20	1	SPARE	
	WATER SOFTNER / WATER HEATER	20	1	E	17					1,200		18		20	1	SPARE	
	PUMP DCP-1	20	1	M	19	528						20				SPACE	
	PUMP DCP-2	20	1	M	21			528				22				SPACE	
	PUMP DCP-3	20	1	M	23					528		24				SPACE	
	BOILER B-0A-1	20	1	E	25	1,800						26				SPACE	
	BOILER B-0A-2	20	1	E	27			1,800				28				SPACE	
	SPARE	20	1		29							30				SPACE	
	TOTAL CONNECTED LOAD PER PHASE (VA):					9,216		7,113		6,976							
	TOTAL ESTIMATED DEMAND LOAD PER PHASE (VA):					9,756		7,113		6,976							
	TOTAL ESTIMATED DEMAND LOAD PER PHASE (AMPS):					81		59		58							

TYPE	LOAD CLASSIFICATION	CONNECTED LOAD	DEMAND FACTOR	ESTIMATED DEMAND
P	SUB-PANEL	SUB-PANEL LOADS BROKEN OUT BY LOAD CLASSIFICATION BELOW		
R	RECEPTACLES	-	-	-
L	LIGHTING	-	-	-
C	CONTINUOUS	-	-	-
E	EQUIPMENT	7,200 VA	100%	7,200 VA
M	MOTOR	16,105 VA	100%	16,105 VA
K	KITCHEN	-	-	-
	OTHER	-	-	-

PANEL TOTALS
TOTAL CONNECTED LOAD: 23,305 VA
25% OF LARGEST MOTOR: 540 VA
TOTAL ESTIMATED DEMAND LOAD: 23,845 VA
TOTAL ESTIMATED DEMAND BALANCED CURRENT: 66 AMPS
MAXIMUM ESTIMATED DEMAND PHASE CURRENT: 81 AMPS

PANELBOARD SCHEDULE

PANEL NAME: 0LAA — MOUNTING: SURFACE; ENCLOSURE: NEMA 1; DOOR STYLE: DOOR-IN-DOOR
VOLTAGE: 208Y/120; PHASE: 3; WIRE: 4; MIN. A.I.C. RATING: 22KA
MAINS TYPE: MLO; BUS MATERIAL: ALUMINUM; BUS RATING: 225 AMPS; MCB RATING: NONE
SPD: CATEGORY "A"; NEUTRAL: 200% RATED; BRANCH OCP TYPE: BOLT-ON CBs; ISOLATED GROUND: NO

NOTE	CIRCUIT DESCRIPTION	BREAKER AMPS	BREAKER POLE	LOAD TYPE	CKT. #	A	A	B	B	C	C	CKT. #	LOAD TYPE	BREAKER AMPS	BREAKER POLE	CIRCUIT DESCRIPTION	NOTE
	CORRIDOR, CUSTODIAL, ELECT C.O.	20	1	R	1	1,260	1,080					2	R	20	1	KINDER A014 C.O.	
	ELEVATOR CONTROLS/ LTS	20	1	R	3			1,200	900			4	R	20	1	KINDER A014 C.O.	
	ELEVATOR PIT / SHAFT C.O.	20	1	R	5					540	180	6	R	20	1	KINDER A014 A/V C.O.	
	BOILER ROOM C.O.	20	1	R	7	1,080	720					8	R	20	1	INTERVENTION A015 C.O.	
	CORRIDOR, STAIR C.O.	20	1	R	9			720	1,260			10	R	20	1	KINDER A011 C.O.	
	CORRIDOR, EXTERIOR C.O.	20	1	R	11					900	900	12	R	20	1	KINDER A011 C.O.	
	STAIR, EXTERIOR, MECH C.O.	20	1	R	13	720	180					14	R	20	1	KINDER A011 A/V C.O.	
	KINDER A005 C.O.	20	1	R	15			900	900			16	R	20	1	K-LEADERS A009 C.O.	
	KINDER A005 C.O.	20	1	R	17					900	540	18	R	20	1	K-LEADERS A009 C.O.	
	KINDER A005 A/V C.O.	20	1	R	19	180	720					20	R	20	1	K-LEADERS A009 C.O.	
1	COORIDOR DRINKING FOUNTAIN	20	1	R	21			600	720			22	R	20	1	K-LEADERS A009 C.O.	
	KINDER A005 C.O.	20	1	R	23					900	180	24	R	20	1	K-LEADERS A009 A/V C.O.	
	KINDER A005 C.O.	20	1	R	25	900						26		20	1	SPARE	
	KINDER A005 A/V C.O.	20	1	R	27			180				28		20	1	SPARE	
	SPARE	20	1		29							30		20	1	SPARE	
	SPARE	20	1		31							32				SPACE	
	SPARE	20	1		33							34				SPACE	
	SPARE	20	1		35							36				SPACE	
	SPARE	20	1		37							38				SPACE	
	SPARE	20	1		39							40				SPACE	
	SPARE	20	1		41							42				SPACE	
	TOTAL CONNECTED LOAD PER PHASE (VA):					6,840		7,380		5,040							
	TOTAL ESTIMATED DEMAND LOAD PER PHASE (VA):					5,196		5,606		3,828							
	TOTAL ESTIMATED DEMAND LOAD PER PHASE (AMPS):					43		47		32							

TYPE	LOAD CLASSIFICATION	CONNECTED LOAD	DEMAND FACTOR	ESTIMATED DEMAND
P	SUB-PANEL	SUB-PANEL LOADS BROKEN OUT BY LOAD CLASSIFICATION BELOW		
R	RECEPTACLES	19,260 VA	76%	14,630 VA
L	LIGHTING	-	-	-
C	CONTINUOUS	-	-	-
E	EQUIPMENT	-	-	-
M	MOTOR	-	-	-
K	KITCHEN	-	-	-
	OTHER	-	-	-

PANEL TOTALS
TOTAL CONNECTED LOAD: 19,260 VA
25% OF LARGEST MOTOR: -
TOTAL ESTIMATED DEMAND LOAD: 14,630 VA
TOTAL ESTIMATED DEMAND BALANCED CURRENT: 41 AMPS
MAXIMUM ESTIMATED DEMAND PHASE CURRENT: 47 AMPS

FFKR ARCHITECTS
730 Pacific Avenue · Salt Lake City, Utah 84104
O 801.521.6186 · FFKR.COM

ENVISION ENGINEERING
240 E. MORRIS AVE. SUITE 200
SALT LAKE CITY, UT 84115
P (801) 534-1130
F (801) 534-1080
www.envisioneng.com

POLK ELEMENTARY RENOVATION
2615 POLK AVE, OGDEN, UTAH 84401
OGDEN SCHOOL DISTRICT
CONSTRUCTION DOCUMENTS - FEBURARY 28, 2020

REGISTERED PROFESSIONAL ENGINEER — JEFFREY R. OWEN — No. 177411 — STATE OF UTAH

△ DATE REVISION

PROJECT NUMBER 19030

PANEL SCHEDULES

EP801

DISTRIBUTION BOARD LOAD SUMMARY

BOARD NAME: DPH0B2

VOLTAGE: 480Y/277 | PHASE: 3 | WIRES: 4
BUS RATING: 400 AMPS | MAINS TYPE: MLO | MCB RATING: NONE

LOAD #	LOAD DESCRIPTION	LOAD TYPE	CONNECTED LOAD/PHASE (KVA) A	B	C	KEYED NOTE
1	PANEL 1HB2A	P	4.2	2.8	2.5	
2	TRANSFORMER T-0B2	P	19.2	17.8	15.1	
3						
4						
5						
6						
7						
8						
9						
10						
	TOTAL CONNECTED LOAD PER PHASE (KVA):		23.4	20.6	17.6	
	TOTAL ESTIMATED DEMAND LOAD PER PHASE (KVA):		19.1	16.1	13.8	
	TOTAL ESTIMATED DEMAND LOAD PER PHASE (AMPS):		69	58	50	

TYPE	LOAD CLASSIFICATION	CONNECTED LOAD	DEMAND FACTOR	ESTIMATED DEMAND
P	PANELBOARD	PANELBOARD LOADS BROKEN OUT PER TYPE BELOW		
R	RECEPTACLE	40.0 KVA	63%	25.0 KVA
L	LIGHTING *	9.5 KVA	125%	11.9 KVA
C	CONTINUOUS	-	-	-
E	EQUIPMENT	7.6 KVA	100%	7.6 KVA
M	MOTOR	4.6 KVA	100%	4.6 KVA
K	KITCHEN	-	-	-
O	OTHER	-	-	-

DISTRIBUTION BOARD TOTALS
TOTAL CONNECTED LOAD: 61.6 KVA
25% OF LARGEST MOTOR: .3 KVA
TOTAL ESTIMATED DEMAND LOAD: 49.3 KVA
TOTAL ESTIMATED DEMAND BALANCED CURRENT: 59 AMPS
MAXIMUM ESTIMATED DEMAND PHASE CURRENT: 69 AMPS

NOTES:
* THE LARGER OF THE ACTUAL CONNECTED LIGHTING LOAD AND THE MINIMUM GENERAL LIGHTING LOAD BY OCCUPANCY PER NEC TABLE 220.12

PANELBOARD SCHEDULE

PANEL NAME: 2LAB
MOUNTING: SURFACE | ENCLOSURE: NEMA 1 | DOOR STYLE: DOOR-IN-DOOR
VOLTAGE: 208Y/120 | PHASE: 3 | WIRE: 4 | MIN. A.I.C. RATING: 22KA
MAINS TYPE: MLO | BUS MATERIAL: ALUMINUM | BUS RATING: 225 AMPS | MCB RATING: NONE
SPD: NONE | NEUTRAL: 100% RATED | BRANCH OCP TYPE: BOLT-ON CBs | ISOLATED GROUND: NO

NOTE	CIRCUIT DESCRIPTION	BREAKER AMPS	BREAKER POLE	LOAD TYPE	CKT. #	A	A	B	B	C	C	CKT. #	LOAD TYPE	BREAKER AMPS	BREAKER POLE	CIRCUIT DESCRIPTION	NOTE
	AIREDALE UNIT AD-2A-1	25	1	M	1	2,160	208					2	M	20	2	CEILING CASSETTE CC-2A-1,2,3,4	
	AIREDALE UNIT AD-2A-2	25	1	M	3			2,160	208			4	M	-	-	-	
	AIREDALE UNIT AD-2A-3	25	1	M	5					2,160	1,352	6	M	15	2	ENERGY RECOVERY UNIT ERV-2A-1	
	AIREDALE UNIT AD-2A-4	25	1	M	7	2,160	1,352					8	M	-	-	-	
	AIREDALE UNIT AD-2A-5	25	1	M	9			2,160				10		20	1	SPARE	
	AIREDALE UNIT AD-2A-6	25	1	M	11					2,160		12		20	1	SPARE	
	EXHAUST FAN EF-1A-1	15	1	M	13	720						14		20	1	SPARE	
	EXHAUST FAN EF-1A-2	15	1	M	15			480				16				SPACE	
	EXHAUST FAN EF-1A-3	15	1	M	17					480		18				SPACE	
	EXHAUST FAN EF-1A-4	15	1	M	19	480						20				SPACE	
	EXHAUST FAN EF-1A-5	15	1	M	21			480				22				SPACE	
	LOW ROOF C.O.	20	1	R	23					540		24				SPACE	
	EXHAUST FAN EF-2A-1	20	1	M	25	1,200						26				SPACE	
	HIGH ROOF C.O.	20	1	R	27			360				28				SPACE	
	SPARE	20			29							30				SPACE	
	TOTAL CONNECTED LOAD PER PHASE (VA):					8,280		5,848		6,692							
	TOTAL ESTIMATED DEMAND LOAD PER PHASE (VA):					8,618		5,848		7,030							
	TOTAL ESTIMATED DEMAND LOAD PER PHASE (AMPS):					72		49		59							

TYPE	LOAD CLASSIFICATION	CONNECTED LOAD	DEMAND FACTOR	ESTIMATED DEMAND	PANEL TOTALS
P	SUB-PANEL	SUB-PANEL LOADS BROKEN OUT BY LOAD CLASIFICATION BELOW			
R	RECEPTACLES	900 VA	100%	900 VA	TOTAL CONNECTED LOAD: 20,820 VA
L	LIGHTING	-	-	-	25% OF LARGEST MOTOR: 676 VA
C	CONTINUOUS	-	-	-	TOTAL ESTIMATED DEMAND LOAD: 21,496 VA
E	EQUIPMENT	-	-	-	TOTAL ESTIMATED DEMAND BALANCED CURRENT: 60 AMPS
M	MOTOR	19,920 VA	100%	19,920 VA	MAXIMUM ESTIMATED DEMAND PHASE CURRENT: 72 AMPS
K	KITCHEN	-	-	-	
	OTHER	-	-	-	

PANELBOARD SCHEDULE

PANEL NAME: 2LAA

[illegible]

PANELBOARD SCHEDULE

PANEL NAME: 1LAB

[illegible]

PANELBOARD SCHEDULE

PANEL NAME: 1LB2A

[illegible]

PANELBOARD SCHEDULE

PANEL NAME: 0LB2A

[illegible]

DISTRIBUTION BOARD LOAD SUMMARY

BOARD NAME: DPL0B2

VOLTAGE: 208Y/120 | PHASE: 3 | WIRES: 4
BUS RATING: 400 AMPS | MAINS TYPE: MCB | MCB RATING: 400 AMPS

LOAD #	LOAD DESCRIPTION	LOAD TYPE	CONNECTED LOAD/PHASE (KVA) A	B	C	KEYED NOTE
1	PANEL 0LB2A	P	6.0	5.1	4.4	
2	PANEL 1LB2A	P	5.8	4.7	4.6	
3	PANEL 2LB2A	P	7.4	8.0	6.2	
4						
5						
6						
7						
8						
9						
10						
	TOTAL CONNECTED LOAD PER PHASE (KVA):		19.2	17.8	15.1	
	TOTAL ESTIMATED DEMAND LOAD PER PHASE (KVA):		13.8	12.6	10.7	
	TOTAL ESTIMATED DEMAND LOAD PER PHASE (AMPS):		115	105	89	

TYPE	LOAD CLASSIFICATION	CONNECTED LOAD	DEMAND FACTOR	ESTIMATED DEMAND
P	PANELBOARD	PANELBOARD LOADS BROKEN OUT PER TYPE BELOW		
R	RECEPTACLE	40.0 KVA	63%	25.0 KVA
L	LIGHTING *	-	-	-
C	CONTINUOUS	-	-	-
E	EQUIPMENT	7.6 KVA	100%	7.6 KVA
M	MOTOR	4.6 KVA	100%	4.6 KVA
K	KITCHEN	-	-	-
O	OTHER	-	-	-

DISTRIBUTION BOARD TOTALS
TOTAL CONNECTED LOAD: 52.1 KVA
25% OF LARGEST MOTOR: .3 KVA
TOTAL ESTIMATED DEMAND LOAD: 37.4 KVA
TOTAL ESTIMATED DEMAND BALANCED CURRENT: 104 AMPS
MAXIMUM ESTIMATED DEMAND PHASE CURRENT: 115 AMPS

NOTES:
* THE LARGER OF THE ACTUAL CONNECTED LIGHTING LOAD AND THE MINIMUM GENERAL LIGHTING LOAD BY OCCUPANCY PER NEC TABLE 220.12

PANELBOARD SCHEDULE

PANEL NAME: 1HB2A

[illegible]

PANELBOARD SCHEDULE NOTES:

1. CONTRACTOR SHALL USE THE ROOM NAMES LISTED ON THE ARCHITECTURAL SIGNAGE PLAN FOR ALL ROOM NAMES ON THE FINAL PANEL SCHEDULE CIRCUIT DESCRIPTIONS. IF IT IS FOUND THAT THE ARCHITECTURAL FLOOR PLAN ROOM NAMES HAVE BEEN USED THE SCHEDULES WILL BE UPDATED TO FOR THE CORRECT ROOM NAMES AT NO ADDITIONAL COST TO THE OWNER.

PANELBOARD SCHEDULE GENERAL NOTES:

1. FOR MULTI-PHASE BRANCH CIRCUITS WHERE NEUTRAL CONDUCTORS ARE SHARED, PROVIDE BREAKERS AS FOLLOWS:

120/208V, 3-PHASE SYSTEMS - PROVIDE UL-LISTED COMMON HANDLES ON CIRCUIT BREAKERS FOR CIRCUITS THAT SHARE A NEUTRAL WHETHER SHOWN OR NOT.

277/480V, 3-PHASE SYSTEMS - PROVIDE 480V, MULTI-POLE BREAKERS FOR 277V CIRCUITS THAT SHARE A NEUTRAL WHETHER SHOWN OR NOT. PLEASE NOTE THAT FOR 277V BRANCH CIRCUITS ONLY, A DEDICATED NEUTRAL MAY BE PROVIDED FOR EACH CIRCUIT IN CONJUNCTION WITH 20A-1P BREAKERS IN LIEU OF SHARED NEUTRALS WITH MULTI-POLE BREAKERS.

2. CONTRACTOR SHALL UPSIZE ALL BRANCH CIRCUITS AS NECESSARY FOR VOLTAGE DROP WHETHER SHOWN OR NOT.

PANELBOARD SCHEDULE KEYED NOTES:
1. PROVIDE CLASS A GROUND FAULT INTERRUPTER TYPE CIRCUIT BREAKER.
2. PROVIDE ARC FAULT CIRCUIT INTERRUPTER TYPE CIRCUIT BREAKER.
3. PROVIDE 30 MILLIAMPERE EQUIPMENT GROUND FAULT PROTECTOR TYPE CIRCUIT BREAKER.
4. PROVIDE SHUNT-TRIP TYPE CIRCUIT BREAKER WITH 120V COIL.
5. PROVIDE HACR RATED CIRCUIT BREAKER.
6. PROVIDE HANDLE CLAMP FOR HOLDING CIRCUIT BREAKER IN THE "ON" OR "OFF" POSITION.
7. PROVIDE SWITCHING RATED CIRCUIT BREAKER.
8. PROVIDE NEW CIRCUIT BREAKER IN EXISTING PANELBOARD (WHERE PANEL IS INDICATED AS EXISTING) OF SAME MANUFACTURER AND A.I.C. RATING AS EXISTING.
9. EXISTING LOAD.

DISTRIBUTION BOARD LOAD SUMMARY

BOARD NAME: DPL0B3

VOLTAGE: 208Y/120 | PHASE: 3 | WIRES: 4
BUS RATING: 400 AMPS | MAINS TYPE: MCB | MCB RATING: 400 AMPS

LOAD #	LOAD DESCRIPTION	LOAD TYPE	CONNECTED LOAD/PHASE (KVA) A	B	C	KEYED NOTE
1	PANEL 0LB3A	P	5.1	4.9	4.8	
2	PANEL 1LB3A	P	5.0	4.1	4.0	
3	PANEL 1LB3B	P	9.4	8.6	6.7	
4	PANEL 2LB3A	P	9.1	6.7	5.8	
5						
6						
7						
8						
9						
10						
	TOTAL CONNECTED LOAD PER PHASE (KVA):		28.5	24.3	21.2	
	TOTAL ESTIMATED DEMAND LOAD PER PHASE (KVA):		22.9	18.8	16.1	
	TOTAL ESTIMATED DEMAND LOAD PER PHASE (AMPS):		191	156	134	

TYPE	LOAD CLASSIFICATION	CONNECTED LOAD	DEMAND FACTOR	ESTIMATED DEMAND
P	PANELBOARD	PANELBOARD LOADS BROKEN OUT PER TYPE BELOW		
R	RECEPTACLE	43.7 KVA	61%	26.8 KVA
L	LIGHTING *	2.4 KVA	125%	3.0 KVA
C	CONTINUOUS	-	-	-
E	EQUIPMENT	9.4 KVA	100%	9.4 KVA
M	MOTOR	17.4 KVA	100%	17.4 KVA
K	KITCHEN	-	-	-
O	OTHER	1.2 KVA	100%	1.2 KVA

DISTRIBUTION BOARD TOTALS
TOTAL CONNECTED LOAD: 74.0 KVA
25% OF LARGEST MOTOR: .8 KVA
TOTAL ESTIMATED DEMAND LOAD: 58.6 KVA
TOTAL ESTIMATED DEMAND BALANCED CURRENT: 163 AMPS
MAXIMUM ESTIMATED DEMAND PHASE CURRENT: 191 AMPS

NOTES:
* THE LARGER OF THE ACTUAL CONNECTED LIGHTING LOAD AND THE MINIMUM GENERAL LIGHTING LOAD BY OCCUPANCY PER NEC TABLE 220.12

PANELBOARD SCHEDULE

PANEL NAME: 1HB3A

[illegible]

DISTRIBUTION BOARD LOAD SUMMARY

BOARD NAME: DPH0B3

VOLTAGE: 480Y/277 | PHASE: 3 | WIRES: 4
BUS RATING: 400 AMPS | MAINS TYPE: MLO | MCB RATING: NONE

LOAD #	LOAD DESCRIPTION	LOAD TYPE	CONNECTED LOAD/PHASE (KVA) A	B	C	KEYED NOTE
1	PANEL 1HB3A	P	3.7	2.5	2.2	
2	TRANSFORMER T-OB3	P	28.5	24.3	21.2	
3						
4						
5						
6						
7						
8						
9						
10						
	TOTAL CONNECTED LOAD PER PHASE (KVA):		32.3	26.8	23.4	
	TOTAL ESTIMATED DEMAND LOAD PER PHASE (KVA):		27.6	21.9	18.8	
	TOTAL ESTIMATED DEMAND LOAD PER PHASE (AMPS):		100	79	68	

TYPE	LOAD CLASSIFICATION	CONNECTED LOAD	DEMAND FACTOR	ESTIMATED DEMAND
P	PANELBOARD	PANELBOARD LOADS BROKEN OUT PER TYPE BELOW		
R	RECEPTACLE	43.7 KVA	61%	26.8 KVA
L	LIGHTING *	10.9 KVA	125%	13.6 KVA
C	CONTINUOUS	-	-	-
E	EQUIPMENT	9.4 KVA	100%	9.4 KVA
M	MOTOR	17.4 KVA	100%	17.4 KVA
K	KITCHEN	-	-	-
O	OTHER	1.2 KVA	100%	1.2 KVA

DISTRIBUTION BOARD TOTALS
TOTAL CONNECTED LOAD: 82.5 KVA
25% OF LARGEST MOTOR: .8 KVA
TOTAL ESTIMATED DEMAND LOAD: 69.2 KVA
TOTAL ESTIMATED DEMAND BALANCED CURRENT: 83 AMPS
MAXIMUM ESTIMATED DEMAND PHASE CURRENT: 100 AMPS

NOTES:
* THE LARGER OF THE ACTUAL CONNECTED LIGHTING LOAD AND THE MINIMUM GENERAL LIGHTING LOAD BY OCCUPANCY PER NEC TABLE 220.12

PANELBOARD SCHEDULE

PANEL NAME: 2LB2A

[illegible]

PANELBOARD SCHEDULE

PANEL NAME: 1LB3B

[illegible]

PANELBOARD SCHEDULE

PANEL NAME: 1LB3A

[illegible]

PANELBOARD SCHEDULE

PANEL NAME: 0LB3A

[illegible]

FFKR ARCHITECTS
730 Pacific Avenue • Salt Lake City, Utah 84104
O 801.521.6186 • FFKR.COM

ENVISION ENGINEERING

POLK ELEMENTARY RENOVATION
2615 POLK AVE, OGDEN, UTAH 84401
OGDEN SCHOOL DISTRICT
CONSTRUCTION DOCUMENTS - FEBURARY 28, 2020

PROJECT NUMBER 19030

PANEL SCHEDULES

EP802

REFERENCE NOTES

PANELBOARD SCHEDULE

PANEL NAME: 1EHB2
MOUNTING: SURFACE | ENCLOSURE: NEMA 1 | DOOR STYLE: DOOR&DOOR
VOLTAGE: 480/277 | PHASE: 3 | WIRE: 4 | MIN. A.I.C. RATING: 65KA
MAIN TYPE: MLO | BUS MATERIAL: ALUMINUM | BUS RATING: 100 AMPS | MCB RATING: NONE
MAIN FEED LUGS: NEUTRAL: 100% RATED | BRANCH OCP TYPE: BOLT-ON CBs | ISOLATED GROUND: NO
SPD: CATEGORY: 'A'

NOTE	circuit description	BREAKER AMPS	POLE	LOAD TYPE	CONNECTED LOAD PHASE (VA) A	B	C	LOAD TYPE	BREAKER AMPS	POLE	circuit description	NOTE
	VU-1 CLASS RM / COLLABS LVS	20	1	L	576						SPARE	
	VU-1 CLASSROOM / COLLABS LVS	20	1	L		1440					SPARE	
	VU-1 CLASSROOM / COLLABS LVS	20	1	L			1440				SPARE	
	VU-1 CORRIDOR / BEACH BELLS	20	1	L	1440						SPARE	
	VU-1 CORRIDOR / BEACH BELLS	20	1	L		1440					SPARE	
	LIGHTING CONTROL PANEL	20	1	B	1		1440				SPARE	
	EXTERIOR BUILDING LIGHTS	20	1	L	1440						SPARE	
	SPARE	20	1								SPARE	
	SPARE	20	1								SPARE	
	SPARE	20	1								SPARE	
	SPARE	20	1								SPARE	
	SPARE	20	1								SPARE	
	SPARE	20	1								SPARE	
	SPARE	20	1								SPARE	
	SPARE	20	1								SPARE	
	SPARE	20	1								SPARE	
	TOTAL CONNECTED LOAD PER PHASE (VA)				3,135	3,596	2,881					
	TOTAL ESTIMATED DEMAND LOAD PER PHASE (VA)				3,893	4,695	3,954					
	TOTAL ESTIMATED DEMAND LOAD PER PHASE (AMPS)				35	42	34					

PHASE	LOAD VA	CIRCUIT DESCRIPTION PANEL 1EHB3
A	4,111	-
B	3,661	-
C	4,183	-

TYPE	LOAD CLASSIFICATION	CONNECTED LOAD	DEMAND FACTOR	ESTIMATED DEMAND	PANEL TOTALS
P	SUBPANEL	SUBPANEL LOADS SHOWN OUT BY LOAD CLASSIFICATION BELOW			
R	RECEPTACLES	10,890 VA	17%	1,852 VA	TOTAL CONNECTED LOAD: 10,890 VA
L	LIGHTING	11,808 VA	12%	1,418 VA	25% OF LARGEST MOTOR: -
C	CONTINUOUS	-	-	-	TOTAL ESTIMATED DEMAND LOAD: 13,968 VA
E	EQUIPMENT	1,920 VA	100%	1,920 VA	TOTAL ESTIMATED DEMAND BALANCED CURRENT: 39 AMPS
M	MOTOR	-	-	-	MAXIMUM ESTIMATED DEMAND PHASE CURRENT: 39 AMPS
K	KITCHEN	-	-	-	
	OTHER	-	-	-	

PANELBOARD SCHEDULE

PANEL NAME: 1EHA
MOUNTING: SURFACE | ENCLOSURE: NEMA 1 | DOOR STYLE: DOOR&DOOR
VOLTAGE: 480/277 | PHASE: 3 | WIRE: 4 | MIN. A.I.C. RATING: 65KA
MAIN TYPE: MLO | BUS MATERIAL: ALUMINUM | BUS RATING: 100 AMPS | MCB RATING: NONE
SPD: CATEGORY: 'A' | NEUTRAL: 100% RATED | BRANCH OCP TYPE: BOLT-ON CBs | ISOLATED GROUND: NO

NOTE	circuit description	BREAKER AMPS	POLE	LOAD TYPE	CONNECTED LOAD PHASE (VA) A	B	C	LOAD TYPE	BREAKER AMPS	POLE	circuit description	NOTE
	VU-1 SUPERVISOR / ENTRY BELLS	20	1	L	180						SPARE	
	VU-1 SUPERVISOR / ENTRY BELLS	20	1	L		180					SPARE	
	VU-1 SUPERVISOR / ENTRY BELLS	20	1	L			180				SPARE	
	LIGHTING CONTROL PANEL	20	1	B	1		1440				SPARE	
	EXTERIOR BUILDING LIGHTS	20	1	L		1440					SPARE	
	SPARE	20	1								SPARE	
	SPARE	20	1								SPARE	
	SPARE	20	1								SPARE	
	SPARE	20	1								SPARE	
	SPARE	20	1								SPARE	
	SPARE	20	1								SPARE	
	SPARE	20	1								SPARE	
	SPARE	20	1								SPARE	
	SPARE	20	1								SPARE	
	TOTAL CONNECTED LOAD PER PHASE (VA)				1,805	3,078	1,398					
	TOTAL ESTIMATED DEMAND LOAD PER PHASE (VA)				3,289	3,204	1,423					
	TOTAL ESTIMATED DEMAND LOAD PER PHASE (AMPS)				10	9	11					

TYPE	LOAD CLASSIFICATION	CONNECTED LOAD	DEMAND FACTOR	ESTIMATED DEMAND	PANEL TOTALS
P	SUBPANEL	SUBPANEL LOADS SHOWN OUT BY LOAD CLASSIFICATION BELOW			
R	RECEPTACLES	-	-	-	TOTAL CONNECTED LOAD: 7,338 VA
L	LIGHTING	3,276 VA	12%	393 VA	25% OF LARGEST MOTOR: -
C	CONTINUOUS	-	-	-	TOTAL ESTIMATED DEMAND LOAD: 7,338 VA
E	EQUIPMENT	3,660 VA	100%	3,660 VA	TOTAL ESTIMATED DEMAND BALANCED CURRENT: 12 AMPS
M	MOTOR	-	-	-	MAXIMUM ESTIMATED DEMAND PHASE CURRENT: 12 AMPS
K	KITCHEN	-	-	-	
	OTHER	-	-	-	

PANELBOARD SCHEDULE

PANEL NAME: 2LB3A
MOUNTING: SURFACE | ENCLOSURE: NEMA 1 | DOOR STYLE: DOOR&DOOR
VOLTAGE: 208/120 | PHASE: 3 | WIRE: 4 | MIN. A.I.C. RATING: 22KA
MAIN TYPE: MLO | BUS MATERIAL: ALUMINUM | BUS RATING: 225 AMPS | MCB RATING: NONE
SPD: CATEGORY: 'A' | NEUTRAL: 200% RATED | BRANCH OCP TYPE: BOLT-ON CBs | ISOLATED GROUND: NO

NOTE	circuit description	BREAKER AMPS	POLE	LOAD TYPE	CONNECTED LOAD PHASE (VA) A	B	C	LOAD TYPE	BREAKER AMPS	POLE	circuit description	NOTE
	CLASSROOM A108 RAD.	20	1	R	720	1440					SPARE	
	CLASSROOM A108 RAD.	20	1	R			1440				SPARE	
	CLASSROOM A109 RAD.	20	1	R	720	1440					SPARE	
	CLASSROOM A109 RAD.	20	1	R			1440				SPARE	
	CLASSROOM A110 RAD.	20	1	R	720	1440					SPARE	
	CLASSROOM A110 RAD.	20	1	R			1440				SPARE	
	CLASSROOM A111 RAD.	20	1	R	720	1440					SPARE	
	CLASSROOM A111 RAD.	20	1	R			1440				SPARE	
	CLASSROOM A112 RAD.	20	1	R	720	1440					SPARE	
	CLASSROOM A112 RAD.	20	1	R			1440				SPARE	
	COLLAB A113 RAD.	20	1	R	720	1440					SPARE	
	COLLAB A113 RAD.	20	1	R			1440				SPARE	
	CORRIDOR A114 RAD.	20	1	R	720	1440					SPARE	
	CORRIDOR A114 RAD.	20	1	R			1440				SPARE	
	WAP CLASSROOM	20	1	R	720						SPARE	
	SPARE	20	1								SPARE	
	SPARE	20	1								SPARE	
	SPARE	20	1								SPARE	
	SPARE	20	1								SPARE	
	SPARE	20	1								SPARE	
	TOTAL CONNECTED LOAD PER PHASE (VA)				6,480	8,640	5,760					
	TOTAL ESTIMATED DEMAND LOAD PER PHASE (VA)				3,168	3,888	2,880					
	TOTAL ESTIMATED DEMAND LOAD PER PHASE (AMPS)				26	32	24					

TYPE	LOAD CLASSIFICATION	CONNECTED LOAD	DEMAND FACTOR	ESTIMATED DEMAND	PANEL TOTALS
P	SUBPANEL	SUBPANEL LOADS SHOWN OUT BY LOAD CLASSIFICATION BELOW			
R	RECEPTACLES	12,960 VA	17%	11,842 VA	TOTAL CONNECTED LOAD: 21,480 VA
L	LIGHTING	2,400 VA	12%	3,000 VA	25% OF LARGEST MOTOR: 308 VA
C	CONTINUOUS	-	-	-	TOTAL ESTIMATED DEMAND LOAD: 23,042 VA
E	EQUIPMENT	3,000 VA	100%	3,000 VA	TOTAL ESTIMATED DEMAND BALANCED CURRENT: 27 AMPS
M	MOTOR	1,200 VA	100%	1,200 VA	MAXIMUM ESTIMATED DEMAND PHASE CURRENT: 75 AMPS
K	KITCHEN	-	-	-	
	OTHER	1,200 VA	100%	1,200 VA	

PANELBOARD SCHEDULE

PANEL NAME: 2SLB2
MOUNTING: SURFACE | ENCLOSURE: NEMA 1 | DOOR STYLE: DOOR&DOOR
VOLTAGE: 208/120 | PHASE: 3 | WIRE: 4 | MIN. A.I.C. RATING: 10KA
MAIN TYPE: MCB | BUS MATERIAL: ALUMINUM | BUS RATING: 225 AMPS | MCB RATING: 110 AMPS
SPD: CATEGORY: 'A' | NEUTRAL: 100% RATED | BRANCH OCP TYPE: BOLT-ON CBs | ISOLATED GROUND: NO

NOTE	circuit description	BREAKER AMPS	POLE	LOAD TYPE	CONNECTED LOAD PHASE (VA) A	B	C	LOAD TYPE	BREAKER AMPS	POLE	circuit description	NOTE
E	VALVE / COOLER CO-DIESER SW	30	3	K	1296	1296		K	15	1	EP A1/HTS CO.	
-	-	-	-	-			1296	K	15	1	EP A1/HTS CO.	
-	-	-	-	-				K	15	1	EP A1/HTS CO.	
E	VALVE / FREEZER CO-DIESER SW	30	3	K	1296	1296		K	15	1	EP A1/HTS CO.	
-	-	-	-	-			1296	K	15	1	EP A1/HTS CO.	
-	-	-	-	-				K	15	1	EP A1/HTS CO.	
E	VALVE / FREEZER CO2 - DEFROST	20	3	K	1296	1296		K	15	1	EP A1/HTS RADIO CO.	
-	-	-	-	-			1296	K	15	1	EP A1/HTS RADIO CO.	
-	-	-	-	-				K	15	1	EP A1/HTS RADIO CO.	
E	VALVE / COOLER CO2 - TRUE LIGHTS	20	1	K	1296	1296		K	15	1	EP A1/HTS RADIO CO.	
E	VALVE / FREEZER CO2 - TRUE LIGHTS	20	1	K	1296		1296	K	15	1	EP A1/HTS RADIO CO.	
	SPLIT SYSTEM (CO2) - LVL	20	1	M	1440						-	
-	-	-	-	M		1440		K	20	1	FIRE ALARM FIRE PANEL (NEW)	
-	-	-	-	M			1440	K	20	1	FIRE ALARM FIRE PANEL (NEW)	
	ATC PANEL	20	1	E	360	360					ACCESS CONTROL PANEL	
	SPARE	20	1								SPARE	
	SPARE	20	1								SPARE	
	TOTAL CONNECTED LOAD PER PHASE (VA)				8,888	7,912	5,416					
	TOTAL ESTIMATED DEMAND LOAD PER PHASE (VA)				8,888	7,912	5,416					
	TOTAL ESTIMATED DEMAND LOAD PER PHASE (AMPS)				41	36	25					

TYPE	LOAD CLASSIFICATION	CONNECTED LOAD	DEMAND FACTOR	ESTIMATED DEMAND	PANEL TOTALS
P	SUBPANEL	SUBPANEL LOADS SHOWN OUT BY LOAD CLASSIFICATION BELOW			
R	RECEPTACLES	3,024 VA	100%	3,024 VA	TOTAL CONNECTED LOAD: 25,216 VA
L	LIGHTING	-	-	-	25% OF LARGEST MOTOR: 360 VA
C	CONTINUOUS	-	-	-	TOTAL ESTIMATED DEMAND LOAD: 22,888 VA
E	EQUIPMENT	4,680 VA	100%	4,680 VA	TOTAL ESTIMATED DEMAND BALANCED CURRENT: 64 AMPS
M	MOTOR	1,920 VA	100%	1,920 VA	MAXIMUM ESTIMATED DEMAND PHASE CURRENT: 67 AMPS
K	KITCHEN	11,984 VA	85%	1,778 VA	
	OTHER	-	-	-	

PANELBOARD SCHEDULE

PANEL NAME: 2SLA
MOUNTING: SURFACE | ENCLOSURE: NEMA 1 | DOOR STYLE: DOOR&DOOR
VOLTAGE: 208/120 | PHASE: 3 | WIRE: 4 | MIN. A.I.C. RATING: 10KA
MAIN TYPE: MCB | BUS MATERIAL: ALUMINUM | BUS RATING: 225 AMPS | MCB RATING: 110 AMPS
SPD: CATEGORY: 'A' | NEUTRAL: 100% RATED | BRANCH OCP TYPE: BOLT-ON CBs | ISOLATED GROUND: NO

NOTE	circuit description	BREAKER AMPS	POLE	LOAD TYPE	CONNECTED LOAD PHASE (VA) A	B	C	LOAD TYPE	BREAKER AMPS	POLE	circuit description	NOTE
	ATC PANEL	20	1	E	360	1,728		E	15	1	SPLIT SYSTEM (CO2) - LVL	
	RECEPTACLE CO2	20	1	R			360	E	15	1	-	
	RECEPTACLE CO2	20	1	R	360						-	
	ASSET PROTECTION CO2	20	1	R		360					-	
	FIRE ALARM FIRE CO2	20	1	R	180						-	
	EP FTB CO2	20	1	R		180					RADIO CO2	
	EP FTB CO2	20	1	R			180				RADIO CO2	
	EP FTB CO2	20	1	R	180						RADIO CO2	
	EP FTB CO2	20	1	R		180					RADIO CO2	
	EP FTB CO2	20	1	R			180				RADIO CO2	
	FIRE ALARM CONTROL PANEL	20	1	E	360						RECEPTACLE FIRE DOOR	
	FIRE ALARM ELEC PANEL	20	1	E		360					RECEPTACLE FIRE DOOR	
	INTRUSION DETECTION PANEL	20	1	E			360				SPARE	
	ACCESS CONTROL PANEL	20	1	E	360						SPARE	
	SPARE	20	1			360					SPARE	
	SPARE	20	1				360				SPARE	
	TOTAL CONNECTED LOAD PER PHASE (VA)				1,440	2,628	1,080					
	TOTAL ESTIMATED DEMAND LOAD PER PHASE (VA)				1,440	2,628	1,080					
	TOTAL ESTIMATED DEMAND LOAD PER PHASE (AMPS)				6	11	7					

TYPE	LOAD CLASSIFICATION	CONNECTED LOAD	DEMAND FACTOR	ESTIMATED DEMAND	PANEL TOTALS
P	SUBPANEL	SUBPANEL LOADS SHOWN OUT BY LOAD CLASSIFICATION BELOW			
R	RECEPTACLES	1,800 VA	100%	1,800 VA	TOTAL CONNECTED LOAD: 5,148 VA
L	LIGHTING	-	-	-	25% OF LARGEST MOTOR: -
C	CONTINUOUS	-	-	-	TOTAL ESTIMATED DEMAND LOAD: 1,800 VA
E	EQUIPMENT	3,348 VA	100%	3,348 VA	TOTAL ESTIMATED DEMAND BALANCED CURRENT: 8 AMPS
M	MOTOR	-	-	-	MAXIMUM ESTIMATED DEMAND PHASE CURRENT: 8 AMPS
K	KITCHEN	-	-	-	
	OTHER	-	-	-	

DISTRIBUTION BOARD LOAD SUMMARY

BOARD NAME: DPSH
VOLTAGE: 480/277 | PHASE: 3 | WIRES: 4
BUS RATING: 200 AMPS | MAIN TYPE: MLO | MCB RATING: NONE

LOAD #	LOAD DESCRIPTION	LOAD TYPE	CONNECTED LOAD PHASE (KVA) A	B	C	FIELD NOTE
1	TRANSFORMER 1-DSH	P	1.7	1.7	1.7	
2	TRANSFORMER 2-DSH	P	1.7	1.7	1.7	
3	TRANSFORMER 3-DSH	P	1.0	1.4	1.4	
4						
5						
6						
7						
8						
9						
10						
	TOTAL CONNECTED LOAD PER PHASE (KVA)		3.4	4.8	4.1	
	TOTAL ESTIMATED DEMAND LOAD PER PHASE (KVA)		3.4	4.8	4.1	
	TOTAL ESTIMATED DEMAND LOAD PER PHASE (AMPS)		7.1	10	8.5	

TYPE	LOAD CLASSIFICATION	CONNECTED LOAD	DEMAND FACTOR	ESTIMATED DEMAND
P	SUBPANEL	12.4 KVA	100%	12.4 KVA
R	RECEPTACLE	-	-	-
L	LIGHTING	-	-	-
C	CONTINUOUS	-	-	-
E	EQUIPMENT	1.2 KVA	100%	1.2 KVA
M	MOTOR	14.0 KVA	100%	14.0 KVA
K	KITCHEN	12.0 KVA	70%	8.4 KVA
O	OTHER	-	-	-

DISTRIBUTION BOARD TOTALS	
TOTAL CONNECTED LOAD	38.7 KVA
25% OF LARGEST MOTOR	12.0 KVA
TOTAL ESTIMATED DEMAND LOAD	40.2 KVA
TOTAL ESTIMATED DEMAND BALANCED CURRENT	61 AMPS
MAXIMUM ESTIMATED DEMAND PHASE CURRENT	71 AMPS

NOTES:
* THE LARGER OF THE ACTUAL CONNECTED LIGHTING LOAD AND THE MINIMUM GENERAL LIGHTING LOAD BY OCCUPANCY PER IECC TABLE C405.2

PANELBOARD SCHEDULE

PANEL NAME: 1EHB3
MOUNTING: SURFACE | ENCLOSURE: NEMA 1 | DOOR STYLE: DOOR&DOOR
VOLTAGE: 480/277 | PHASE: 3 | WIRE: 4 | MIN. A.I.C. RATING: 65KA
MAIN TYPE: MLO | BUS MATERIAL: ALUMINUM | BUS RATING: 100 AMPS | MCB RATING: NONE
MAIN FEED LUGS: NEUTRAL: 100% RATED | BRANCH OCP TYPE: BOLT-ON CBs | ISOLATED GROUND: NO
SPD: CATEGORY: 'A'

NOTE	circuit description	BREAKER AMPS	POLE	LOAD TYPE	CONNECTED LOAD PHASE (VA) A	B	C	LOAD TYPE	BREAKER AMPS	POLE	circuit description	NOTE
	VU-1 CLASS RM / COLLABS LVS	20	1	L	576						SPARE	
	VU-1 CLASS RM / COLLABS LVS	20	1	L		1440					SPARE	
	VU-1 CLASS RM / COLLABS LVS	20	1	L			1440				SPARE	
	VU-1 CORRIDOR / ENTRY BELLS	20	1	L	180						SPARE	
	VU-1 MULTIPURPOSE BLT VS	20	1	L		1440					SPARE	
	SPARE	20	1								SPARE	
	SPARE	20	1								SPARE	
	SPARE	20	1								SPARE	
	SPARE	20	1								SPARE	
	SPARE	20	1								SPARE	
	SPARE	20	1								SPARE	
	SPARE	20	1								SPARE	
	SPARE	20	1								SPARE	
	SPARE	20	1								SPARE	
	SPARE	20	1								SPARE	
	TOTAL CONNECTED LOAD PER PHASE (VA)				1,111	1,620	1,440					
	TOTAL ESTIMATED DEMAND LOAD PER PHASE (VA)				4,888	4,620	4,198					
	TOTAL ESTIMATED DEMAND LOAD PER PHASE (AMPS)				19	18	16					

PHASE	LOAD VA	CIRCUIT DESCRIPTION PANEL 1EHA
A	3,289	-
B	3,204	-
C	1,423	-

TYPE	LOAD CLASSIFICATION	CONNECTED LOAD	DEMAND FACTOR	ESTIMATED DEMAND	PANEL TOTALS
P	SUBPANEL	SUBPANEL LOADS SHOWN OUT BY LOAD CLASSIFICATION BELOW			
R	RECEPTACLES	3,960 VA	17%	673 VA	TOTAL CONNECTED LOAD: 11,952 VA
L	LIGHTING	12,552 VA	12%	1,506 VA	25% OF LARGEST MOTOR: -
C	CONTINUOUS	-	-	-	TOTAL ESTIMATED DEMAND LOAD: 14,588 VA
E	EQUIPMENT	960 VA	100%	960 VA	TOTAL ESTIMATED DEMAND BALANCED CURRENT: 18 AMPS
M	MOTOR	-	-	-	MAXIMUM ESTIMATED DEMAND PHASE CURRENT: 18 AMPS
K	KITCHEN	-	-	-	
	OTHER	-	-	-	

PANELBOARD SCHEDULE

PANEL NAME: 2SLB3
MOUNTING: SURFACE | ENCLOSURE: NEMA 1 | DOOR STYLE: DOOR&DOOR
VOLTAGE: 208/120 | PHASE: 3 | WIRE: 4 | MIN. A.I.C. RATING: 10KA
MAIN TYPE: MCB | BUS MATERIAL: ALUMINUM | BUS RATING: 225 AMPS | MCB RATING: 110 AMPS
SPD: CATEGORY: 'A' | NEUTRAL: 100% RATED | BRANCH OCP TYPE: BOLT-ON CBs | ISOLATED GROUND: NO

NOTE	circuit description	BREAKER AMPS	POLE	LOAD TYPE	CONNECTED LOAD PHASE (VA) A	B	C	LOAD TYPE	BREAKER AMPS	POLE	circuit description	NOTE
	MULTIPURPOSE BLT VS	20	1	L	720	1,728		E	15	1	SPLIT SYSTEM (CO2) - LVL	
	MULTIPURPOSE BLT VS	20	1	L			1,728				-	
	MULTIPURPOSE BLT VS	20	1	L	720						-	
	MULTIPURPOSE BLT AV RACK	20	1	L		720		E	20	1	FIRE ALARM TOC PANEL (NEW)	
	EP A108 TTB CO2	20	1	R	720	720		E	20	1	FIRE ALARM TOC PANEL (NEW)	
	EP A108 TTB CO2	20	1	R			720				SPARE	
	EP A108 TTB CO2	20	1	R	720						SPARE	
	EP A108 TTB CO2	20	1	R		720					SPARE	
	EP A108 TTB CO2	20	1	R			720				SPARE	
	EP A108 RADIO CO2	20	1	R	720						SPARE	
	EP A108 RADIO CO2	20	1	R		720					SPARE	
	EP A108 RADIO CO2	20	1	R			720				SPARE	
	EP A108 RADIO CO2	20	1	R	720						SPARE	
	EP A108 RADIO CO2	20	1	R		720					SPARE	
	EP A108 RADIO CO2	20	1	R			720				SPARE	
	SPARE	20	1								SPARE	
	SPARE	20	1								SPARE	
	SPARE	20	1								SPARE	
	TOTAL CONNECTED LOAD PER PHASE (VA)				3,600	3,888	2,304					
	TOTAL ESTIMATED DEMAND LOAD PER PHASE (VA)				4,584	3,312	4,944					
	TOTAL ESTIMATED DEMAND LOAD PER PHASE (AMPS)				38	28	38					

TYPE	LOAD CLASSIFICATION	CONNECTED LOAD	DEMAND FACTOR	ESTIMATED DEMAND	PANEL TOTALS
P	SUBPANEL	SUBPANEL LOADS SHOWN OUT BY LOAD CLASSIFICATION BELOW			
R	RECEPTACLES	9,288 VA	100%	9,288 VA	TOTAL CONNECTED LOAD: 10,080 VA
L	LIGHTING	-	-	-	25% OF LARGEST MOTOR: 648 VA
C	CONTINUOUS	-	-	-	TOTAL ESTIMATED DEMAND LOAD: 10,080 VA
E	EQUIPMENT	3,120 VA	100%	3,120 VA	TOTAL ESTIMATED DEMAND BALANCED CURRENT: 28 AMPS
M	MOTOR	3,960 VA	100%	3,960 VA	MAXIMUM ESTIMATED DEMAND PHASE CURRENT: 38 AMPS
K	KITCHEN	-	-	-	
	OTHER	-	-	-	

PANELBOARD SCHEDULE GENERAL NOTES:

1. FOR MULTIPHASE BRANCH CIRCUITS WHERE NEUTRAL CONDUCTORS ARE SHARED, PROVIDE BREAKERS AS FOLLOWS:

120/208V: 2-PHASE SYSTEMS - PROVIDE UL-LISTED COMMON HANDLES ON CIRCUIT BREAKERS FOR CIRCUITS THAT SHARE A NEUTRAL WHETHER SHOWN OR NOT.

277/480: 3-PHASE SYSTEMS - PROVIDE 480 - MULTI-POLE BREAKERS FOR 277V CIRCUITS THAT SHARE A NEUTRAL WHETHER SHOWN OR NOT. PLEASE NOTE THAT FOR 277V BRANCH CIRCUITS ONLY, A DEDICATED NEUTRAL IS REQUIRED FOR EACH CIRCUIT IN CONJUNCTION WITH 2-P OR 3-P BREAKERS. USE OF SHARED NEUTRALS WITH MULTI-POLE BREAKERS.

2. CONTRACTOR SHALL UPSIZE ALL BRANCH CIRCUITS AS NECESSARY FOR VOLTAGE DROP WHETHER SHOWN OR NOT.

PANELBOARD SCHEDULE NOTES:

1. CONTRACTOR SHALL USE THE ROOM NAMES LISTED ON THE ARCHITECTURAL BRANCH PLAN FOR ALL ROOM NAMES ON THE PANEL SCHEDULE CIRCUIT DESCRIPTIONS. IF THE ROOM THAT THE ARCHITECTURAL FLOOR PLAN ROOM NAMES HAVE BEEN USED THE SCHEDULES WILL BE UPDATED TO FOR THE CORRECT ROOM NAMES AT NO ADDITIONAL COST TO THE OWNER.

PANELBOARD SCHEDULE KEYED NOTES:
1. PROVIDE CLASS A GROUND FAULT INTERRUPTER TYPE CIRCUIT BREAKER.
2. PROVIDE ARC FAULT CIRCUIT INTERRUPTER TYPE CIRCUIT BREAKER.
3. PROVIDE SUPPLEMENTARY EQUIPMENT GROUND FAULT PROTECTOR TYPE CIRCUIT BREAKER.
4. PROVIDE SHUNT TRIP TYPE CIRCUIT BREAKER WITH 120V COIL.
5. PROVIDE MCP RATED CIRCUIT BREAKER.
6. PROVIDE HANDLE CLAMP FOR HOLDING CIRCUIT BREAKER IN THE 'ON' OR 'OFF' POSITION.
7. PROVIDE SWITCHED RATED CIRCUIT BREAKER.
8. PROVIDE CIRCUIT BREAKER IN EXISTING PANELBOARD WHERE PANEL IS INDICATED AS EXISTING OF SAME MANUFACTURER AND A.I.C. RATING AS EXISTING.
9. EXISTING LOAD.

FFKR ARCHITECTS
760 Pacific Avenue - 5th Floor Salt Lake City, Utah 84104
O 801.521.3195 - FFKR.COM

ENVISION ENGINEERING
5471 S. 1900 W. Suite 200
Salt Lake City, UT 84118
P: (801) 364-1100
www.envision-eng.com

POLK ELEMENTARY RENOVATION
2615 POLK AVE, OGDEN, UTAH 84401
OGDEN SCHOOL DISTRICT
CONSTRUCTION DOCUMENTS - FEBURARY 28, 2020

△	DATE	REVISION

PROJECT NUMBER 19030

PANEL SCHEDULES

EP803

2/21/2020 5:37:34 PM

MECHANICAL EQUIPMENT SCHEDULE

UNIT NAME	DESCRIPTION	LOAD	TYPE	VOLTAGE	PHASE	AMPERAGE	CONDUIT SIZE	WIRES NO.	WIRES SIZE	STARTER / DISCONNECT/ CONNECTION AT UNIT NOTE	STARTER SIZE	OCP SIZE	OCP POLES	DISCONNECT SIZE	DISCONNECT POLES	REMARKS
AC-1A-4.1	SPLIT SYSTEM INDOOR	1	MCA	208	1	1	3/4"	2	12	1A	-	-	-	1 HP	2	POWERED FROM OUTDOOR UNIT
AC-1A-4.2	SPLIT SYSTEM OUTDOOR	19	MCA	208	1	19	3/4"	2	10	10A	-	25	2	30	2	NEMA 3R DISCONNECT
AC-1B-1.1	SPLIT SYSTEM INDOOR	1	MCA	208	1	1	3/4"	2	12	1A	-	-	-	1 HP	2	POWERED FROM OUTDOOR UNIT
AC-1B-1.2	SPLIT SYSTEM OUTDOOR	19	MCA	208	1	19	3/4"	2	10	10A	-	25	2	30	2	NEMA 3R DISCONNECT
AC-1B-2.1	SPLIT SYSTEM INDOOR	1	MCA	208	1	1	3/4"	2	12	1A	-	-	-	1 HP	2	POWERED FROM OUTDOOR UNIT
AC-1B-2.2	SPLIT SYSTEM OUTDOOR	19	MCA	208	1	19	3/4"	2	10	10A	-	25	2	30	2	NEMA 3R DISCONNECT
AC-1B-3.1	SPLIT SYSTEM INDOOR	1	MCA	208	1	1	3/4"	2	12	1A	-	-	-	1 HP	2	POWERED FROM OUTDOOR UNIT
AC-1B-3.2	SPLIT SYSTEM OUTDOOR	19	MCA	208	1	19	3/4"	2	10	10A	-	25	2	30	2	NEMA 3R DISCONNECT
AD-0A-1	AIREDALE SYSTEM	18	MCA	120	1	18	3/4"	2	10	1A	-	-	-	1 HP	1	
AD-0A-2	AIREDALE SYSTEM	18	MCA	120	1	18	3/4"	2	10	1A	-	-	-	1 HP	1	
AD-0A-3	AIREDALE SYSTEM	18	MCA	120	1	18	3/4"	2	10	1A	-	-	-	1 HP	1	
AD-1A-1	AIREDALE SYSTEM	18	MCA	120	1	18	3/4"	2	10	1A	-	-	-	1 HP	1	
AD-1A-2	AIREDALE SYSTEM	18	MCA	120	1	18	3/4"	2	10	1A	-	-	-	1 HP	1	
AD-2A-1	AIREDALE SYSTEM	18	MCA	120	1	18	3/4"	2	10	1A	-	-	-	1 HP	1	
AD-2A-2	AIREDALE SYSTEM	18	MCA	120	1	18	3/4"	2	10	1A	-	-	-	1 HP	1	
AD-2A-3	AIREDALE SYSTEM	18	MCA	120	1	18	3/4"	2	10	1A	-	-	-	1 HP	1	
AD-2A-4	AIREDALE SYSTEM	18	MCA	120	1	18	3/4"	2	10	1A	-	-	-	1 HP	1	
AD-2A-5	AIREDALE SYSTEM	18	MCA	120	1	18	3/4"	2	10	1A	-	-	-	1 HP	1	
AD-2A-6	AIREDALE SYSTEM	18	MCA	120	1	18	3/4"	2	10	1A	-	-	-	1 HP	1	
AH-1	AIR HANDLING UNIT	102	MCA	480	3	102	1-1/2"	3	1	10A	-	110	3	200	3	
	AIR HANDLING UNIT LIGHT, OUTLETS, ATC, EVAP, UNIT HEATER	10	FLA	120	1	10	3/4"	2	12	12A	-	-	-	-	-	DISCONNECT BY MECHANICAL
AH-2	AIR HANDLING UNIT	38	MCA	480	3	38	1"	3	8	10A	-	40	3	60	3	
	AIR HANDLING UNIT LIGHT, OUTLETS, ATC, EVAP, UNIT HEATER	10	FLA	120	1	10	3/4"	2	12	12A	-	-	-	-	-	DISCONNECT BY MECHANICAL
B-0A-1	BOILER	15	FLA	120	1	15	3/4"	2	12	1A	-	-	-	1 HP	1	
B-0A-2	BOILER	15	FLA	120	1	15	3/4"	2	12	1A	-	-	-	1 HP	1	
CC-0A-1	CEILING CASSETTE	0.44	MCA	208	1	0.44	3/4"	2	12	1A	-	-	-	1 HP	2	
CC-0A-2	CEILING CASSETTE	0.44	MCA	208	1	0.44	3/4"	2	12	1A	-	-	-	1 HP	2	
CC-0A-3	CEILING CASSETTE	0.44	MCA	208	1	0.44	3/4"	2	12	1A	-	-	-	1 HP	2	
CC-1A-1	CEILING CASSETTE	1.2	MCA	208	1	1.2	3/4"	2	12	1A	-	-	-	1 HP	2	
CC-1A-2	CEILING CASSETTE	0.44	MCA	208	1	0.44	3/4"	2	12	1A	-	-	-	1 HP	2	
CC-1A-3	CEILING CASSETTE	0.44	MCA	208	1	0.44	3/4"	2	12	1A	-	-	-	1 HP	2	
CC-1A-4	CEILING CASSETTE	0.44	MCA	208	1	0.44	3/4"	2	12	1A	-	-	-	1 HP	2	
CC-1A-5	CEILING CASSETTE	0.44	MCA	208	1	0.44	3/4"	2	12	1A	-	-	-	1 HP	2	
CC-1A-6	CEILING CASSETTE	0.69	MCA	208	1	0.69	3/4"	2	12	1A	-	-	-	1 HP	2	
CC-1A-7	CEILING CASSETTE	0.44	MCA	208	1	0.44	3/4"	2	12	1A	-	-	-	1 HP	2	
CC-1A-8	CEILING CASSETTE	0.44	MCA	208	1	0.44	3/4"	2	12	1A	-	-	-	1 HP	2	
CC-1A-9	CEILING CASSETTE	0.44	MCA	208	1	0.44	3/4"	2	12	1A	-	-	-	1 HP	2	
CC-1A-10	CEILING CASSETTE	0.44	MCA	208	1	0.44	3/4"	2	12	1A	-	-	-	1 HP	2	
CC-1A-11	CEILING CASSETTE	0.69	MCA	208	1	0.69	3/4"	2	12	1A	-	-	-	1 HP	2	
CC-1A-12	CEILING CASSETTE	0.69	MCA	208	1	0.69	3/4"	2	12	1A	-	-	-	1 HP	2	
CC-1A-13	CEILING CASSETTE	0.44	MCA	208	1	0.44	3/4"	2	12	1A	-	-	-	1 HP	2	
CC-1A-14	CEILING CASSETTE	0.44	MCA	208	1	0.44	3/4"	2	12	1A	-	-	-	1 HP	2	
CC-1A-15	CEILING CASSETTE	0.44	MCA	208	1	0.44	3/4"	2	12	1A	-	-	-	1 HP	2	
CC-1A-16	CEILING CASSETTE	0.44	MCA	208	1	0.44	3/4"	2	12	1A	-	-	-	1 HP	2	
CC-2A-1	CEILING CASSETTE	0.44	MCA	208	1	0.44	3/4"	2	12	1A	-	-	-	1 HP	2	
CC-2A-2	CEILING CASSETTE	0.44	MCA	208	1	0.44	3/4"	2	12	1A	-	-	-	1 HP	2	
CC-2A-3	CEILING CASSETTE	0.44	MCA	208	1	0.44	3/4"	2	12	1A	-	-	-	1 HP	2	
CC-2A-4	CEILING CASSETTE	0.44	MCA	208	1	0.44	3/4"	2	12	1A	-	-	-	1 HP	2	
CHU-0A-1	CABINET UNIT HEATER	0.07	HP	120	1	3	3/4"	2	12	1A	-	-	-	1 HP	1	
CHU-0A-2	CABINET UNIT HEATER	0.07	HP	120	1	3	3/4"	2	12	1A	-	-	-	1 HP	1	
CHU-0A-3	CABINET UNIT HEATER	0.07	HP	120	1	3	3/4"	2	12	1A	-	-	-	1 HP	1	
CHU-0A-4	CABINET UNIT HEATER	0.07	HP	120	1	3	3/4"	2	12	1A	-	-	-	1 HP	1	
CHU-0B-1	CABINET UNIT HEATER	0.07	HP	120	1	3	3/4"	2	12	1A	-	-	-	1 HP	1	
CHU-1B-1	CABINET UNIT HEATER	0.07	HP	120	1	3	3/4"	2	12	1A	-	-	-	1 HP	1	
CHU-1B-2	CABINET UNIT HEATER	0.07	HP	120	1	3	3/4"	2	12	1A	-	-	-	1 HP	1	
CT-1B-1	COOLING TOWER	3	HP	480	3	4.8	3/4"	3	12	5A/9A	VFD	15	3	30	3	PROVIDE LATE MAKE / EARLY BREAK RELAY IN DISCONNECT AND CONTROL WIRING TO VFD FOR PROPER SHUT-DOWN. NEMA 3R DISCONNECT.
CTF-1B-1	COOLING TOWER FILTER	10	AMPS	120	1	10	3/4"	2	12	13A	-	-	-	-	-	
CH-0A-1	CHILLER	89	FLA	480	3	89	1-1/2"	3	1	10A	-	110	3	200	3	
DCP-1	PUMP	1/6	HP	120	1	4.4	3/4"	2	12	1A	-	-	-	1 HP	1	
DCP-2	PUMP	1/6	HP	120	1	4.4	3/4"	2	12	1A	-	-	-	1 HP	1	
DCP-3	PUMP	1/6	HP	120	1	4.4	3/4"	2	12	1A	-	-	-	1 HP	1	
DCP-4	PUMP	1/6	HP	120	1	4.4	3/4"	2	12	1A	-	-	-	1 HP	1	
EF-1A-1	EXHAUST FAN	0.25	HP	120	1	5.8	3/4"	2	12	1A	-	-	-	1 HP	1	NEMA 3R DISCONNECT
EF-1A-2	EXHAUST FAN	0.125	HP	120	1	3.8	3/4"	2	12	1A	-	-	-	1 HP	1	NEMA 3R DISCONNECT
EF-1A-3	EXHAUST FAN	0.125	HP	120	1	3.8	3/4"	2	12	1A	-	-	-	1 HP	1	NEMA 3R DISCONNECT
EF-1A-4	EXHAUST FAN	0.125	HP	120	1	3.8	3/4"	2	12	1A	-	-	-	1 HP	1	NEMA 3R DISCONNECT
EF-1A-5	EXHAUST FAN	0.125	HP	120	1	3.8	3/4"	2	12	1A	-	-	-	1 HP	1	NEMA 3R DISCONNECT
EF-2A-1	EXHAUST FAN	0.5	HP	120	1	9.8	3/4"	2	12	1A	-	-	-	1 HP	1	NEMA 3R DISCONNECT
EF-2B-1	EXHAUST FAN	1	HP	480	3	2.1	3/4"	3	12	4A,9A	NEMA 0	15	3	30	3	NEMA 3R DISCONNECT
EF-2B-2	EXHAUST FAN	0.5	HP	120	1	9.8	3/4"	2	12	1A	-	-	-	1 HP	1	NEMA 3R DISCONNECT
EF-2B-3	EXHAUST FAN	1	HP	480	3	2.1	3/4"	3	12	10A	-	15	3	30	3	NEMA 3R DISCONNECT / STATER SUPPLIED WITH HOOD
EF-2B-4	EXHAUST FAN	1	HP	480	3	2.1	3/4"	3	12	10A	-	15	3	30	3	NEMA 3R DISCONNECT / STATER SUPPLIED WITH HOOD
EF-2B-5	EXHAUST FAN	0.5	HP	120	1	9.8	3/4"	2	12	1A	-	-	-	1 HP	1	NEMA 3R DISCONNECT
EF-2B-6	EXHAUST FAN	0.5	HP	120	1	9.8	3/4"	2	12	1A	-	-	-	1 HP	1	NEMA 3R DISCONNECT
EF-2B-7	EXHAUST FAN	0.067	HP	120	1	3	3/4"	2	12	1A	-	-	-	1 HP	1	NEMA 3R DISCONNECT
ELEV-1A	PASSENGER ELEVATOR	5.3	HP	480	3	13	3/4"	3	12	10A	-	15	3	30	3	IF RESCUE FEATURE (BATTERY OPERATED ELEVATOR LOWERING) IS REQUIRED, PROVIDE AUXILIARY CONTACT IN FUSED DISCONNECT WITH WIRING TO THE CONTROLLER PER ELEVATOR SUPPLIER INSTRUCTIONS.
	ELEVATOR CONTROLS	10	FLA	120	1	10	3/4"	2	12	10A	-	20	2	30	2	
ELEV-1B	PASSENGER ELEVATOR	5.3	HP	480	3	13	3/4"	3	12	10A	-	15	3	30	3	IF RESCUE FEATURE (BATTERY OPERATED ELEVATOR LOWERING) IS REQUIRED, PROVIDE AUXILIARY CONTACT IN FUSED DISCONNECT WITH WIRING TO THE CONTROLLER PER ELEVATOR SUPPLIER INSTRUCTIONS.
	ELEVATOR CONTROLS	10	FLA	120	1	10	3/4"	2	12	10A	-	20	2	30	2	
ERV-2A-1	ENERGY RECOVERY UNIT	13	MCA	208	1	13	3/4"	2	12	10A	-	15	3	30	3	NEMA 3R DISCONNECT
FC-0A-1	FAN COIL	0.75	HP	120	1	13.8	3/4"	2	10	1A	-	-	-	1 HP	1	
FC-0A-2	FAN COIL	1.5	HP	208	1	10	3/4"	2	10	10A	-	20	2	30	2	
FC-1A-3.1	FAN COIL	1.5	HP	208	1	10	3/4"	2	10	10A	-	20	2	30	2	
FC-1A-3.2	FAN COIL	1.5	HP	208	1	10	3/4"	2	10	10A	-	20	2	30	2	
GFU-0A-1	GLYCOL FEED UNIT	10	FLA	120	1	10	3/4"	2	12	1A	-	-	-	1 HP	1	
GFU-0A-2	GLYCOL FEED UNIT	10	FLA	120	1	10	3/4"	2	12	1A	-	-	-	1 HP	1	
IF-0A-1		0.5	HP	120	1	9.8	3/4"	2	12	1A	-	-	-	1 HP	1	
IF-0B-1	IN-LINE FAN	0.33	HP	120	1	7.2	3/4"	2	12	1A	-	-	-	1 HP	1	
IF-0B-2	IN-LINE FAN	0.33	HP	120	1	7.2	3/4"	2	12	1A	-	-	-	1 HP	1	
IF-0B-3	IN-LINE FAN	0.067	HP	120	1	3	3/4"	2	12	1A	-	-	-	1 HP	1	
IF-1A-1	IN-LINE FAN	0.067	HP	120	1	3	3/4"	2	12	1A	-	-	-	1 HP	1	
IF-1B-1	IN-LINE FAN	0.33	HP	120	1	7.2	3/4"	2	12	1A	-	-	-	1 HP	1	
IF-1B-2	IN-LINE FAN	0.067	HP	120	1	3	3/4"	2	12	1A	-	-	-	1 HP	1	
MAU-2B-1	MAKE-UP AIR UNIT	3	HP	480	3	4.8	3/4"	3	12	12A	-	-	-	-	-	CONTROL PANEL BY MECHANICAL
P-0A-1	PUMP	15	21	480	3	21	1"	3	10	5A	VFD	40	3	60	3	
P-0A-2	PUMP	15	21	480	3	21	1"	3	10	5A	VFD	40	3	60	3	
P-0A-3	PUMP	2	3.4	480	3	3.4	3/4"	3	12	5A	VFD	15	3	30	3	
P-0A-4	PUMP	2	3.4	480	3	3.4	3/4"	3	12	5A	VFD	15	3	30	3	
P-0A-5	PUMP	1.5	3	480	3	3	3/4"	3	12	5A	VFD	15	3	30	3	
P-0A-6	PUMP	1.5	3	480	3	3	3/4"	3	12	5A	VFD	15	3	30	3	
P-1B-1	PUMP	5	7.6	480	3	7.6	3/4"	3	12	5A	VFD	15	3	30	3	
P-1B-2	PUMP	5	7.6	480	3	7.6	3/4"	3	12	5A	VFD	15	3	30	3	
UH-0A-1	UNIT HEATER	24.86	WATT	120	1	0.21	3/4"	2	12	1A	-	-	-	1 HP	1	
UH-0B-1	UNIT HEATER	49.71	WATT	120	1	0.42	3/4"	2	12	1A	-	-	-	1 HP	1	
UH-1B-1	UNIT HEATER	49.71	WATT	120	1	0.42	3/4"	2	12	1A	-	-	-	1 HP	1	
UH-1B-2	UNIT HEATER	49.71	WATT	120	1	0.42	3/4"	2	12	1A	-	-	-	1 HP	1	
UH-1B-3	UNIT HEATER	49.71	WATT	120	1	0.42	3/4"	2	12	1A	-	-	-	1 HP	1	
UH-2B-1	UNIT HEATER	74.57	WATT	120	1	0.62	3/4"	2	12	1A	-	-	-	1 HP	1	
WH-1	WATER HEATER	1	FLA	120	1	1	3/4"	2	12	16A	-	-	-	-	-	CONTROL VOLTAGE
WH-2	WATER HEATER	1	FLA	120	1	1	3/4"	2	12	16A	-	-	-	-	-	CONTROL VOLTAGE
WH-3	WATER HEATER	1	FLA	120	1	1	3/4"	2	12	16A	-	-	-	-	-	CONTROL VOLTAGE
WS-1	WATER SOFTENER	10	FLA	120	1	10	3/4"	2	12	13A	-	-	-	-	-	
WTS-1B-1	WATER TREAMENT SYSTEM	10	FLA	120	1	10	3/4"	2	12	1A	-	-	-	1 HP	1	

SIZE ALL FUSES IN ACCORDANCE WITH MANUFACTURER'S RECOMMENDATIONS.

STARTER / DISCONNECT NOTES:

1. MANUAL STARTER WITH THERMAL OVERLOAD
2. MANUAL STARTER WITH THERMAL OVERLOAD PROTECTION & LOW VOLTAGE RELAY / CONTACTOR FOR ATC CONTROL
3. COMBINATION MAGNETIC STARTER / FUSED DISCONNECT
4. COMBINATION MAGNETIC STARTER / MOTOR CIRCUIT PROTECTOR (MCP)
5. COMBINATION VARIABLE FREQUENCY DRIVE / MOTOR CIRCUIT PROTECTOR (MCP)
6. REDUCED VOLTAGE STARTER
7. COMBINATION TWO-SPEED STARTER / FUSED DISCONNECT
8. COMBINATION TWO-SPEED STARTER / MOTOR CIRCUIT PROTECTOR (MCP)
9. NON-FUSED DISCONNECT SWITCH
10. FUSED DISCONNECT SWITCH
11. BREAKER AND ENCLOSURE
12. DIRECT CONNECTION
13. DUPLEX RECEPTACLE OUTLET
14. SPECIAL PURPOSE OUTLET
15. SHUNT-TRIP BREAKER AND ENCLOSURE
16. TOGGLE SWITCH
17. MAGNETIC STARTER

INSTALLATION NOTES:

A. FURNISHED, INSTALLED, & CONNECTED UNDER DIVISION 26.
B. FURNISHED & INSTALLED UNDER ANOTHER DIVISION REQUIRING CONNECTIONS UNDER DIVISION 26.
C. FURNISHED UNDER ANOTHER DIVISION BUT INSTALLED AND CONNECTED UNDER DIVISION 26.
D. FURNISHED, INSTALLED, & CONNECTED UNDER ANOTHER DIVISION
E. FURNISHED BY OWNER, INSTALLED & CONNECTED BY DIVISION 26

FFKR ARCHITECTS
730 Pacific Avenue • Salt Lake City, Utah 84104
O 801.521.6186 • FFKR.COM

ENVISION ENGINEERING
240 E. MORRIS AVE, SUITE 200
SALT LAKE CITY, UT 84115
P (801) 534-1130
F (801) 534-1080
www.envisioneng.com

POLK ELEMENTARY RENOVATION
2615 POLK AVE, OGDEN, UTAH 84401
OGDEN SCHOOL DISTRICT
CONSTRUCTION DOCUMENTS - FEBURARY 28, 2020

REGISTERED PROFESSIONAL ENGINEER
JEFFREY R. OWEN
No. 377411
STATE OF UTAH

△ DATE REVISION

PROJECT NUMBER 19030

EQUIPMENT SCHEDULES

EP804